CITY OF MONTEBELLO
PLANNING COMMISSION
REGULAR MEETING AGENDA

TUESDAY, JANUARY 16, 2024 AT 6:30 PM

CITY HALL COUNCIL CHAMBERS

1600 WEST BEVERLY BOULEVARD

MONTEBELLO, CALIFORNIA

PLANNING COMMISSION MEMBERS

VICTOR CUEVAS, CHAIR
ALICIA MORALES, PLANNING COMMISSIONER
NATALIA LOMELI, PLANNING COMMISSIONER
JOELLANN VALDEZ, PLANNING COMMISSIONER
ARMANDO MEDINA, PLANNING COMMISSIONER

CITY STAFF

JOSEPH PALOMBI, DIRECTOR OF PLANNING AND COMMUNITY DEVELOPMENT
NVAIR G. DEUKMEJIAN, DEPUTY CITY ATTORNEY
ALEXIS HUERTA, SENIOR ADMINISTRATIVE ASSISTANT

NOTICES

This Planning Commission Meeting will be held in person and will meet at **City Hall – City Council Chambers, 1600 West Beverly Boulevard, Montebello, California**. The meeting will be live streamed and can be watched on the City's website and YouTube Channel via the following link: https://www.montebelloca.gov, and may also be viewed on Spectrum Public Access Channel 3 for all Spectrum cable subscribers.

AMERICANS WITH DISABILITIES ACT: In compliance with the Americans with Disabilities Act (ADA) any person with a disability who requires special accommodations in order to participate in a meeting should contact Alexis Huerta at (323) 887-1324 Monday-Thursday from 7:30 a.m.-5:30 p.m. Please call 48 hours prior to the meeting to ensure that reasonable arrangements can be made to provide accessibility to this meeting (28 CFR 35.102-35.104 ADA Title II 1203). If you require translation services, please contact us 24 hours before this meeting.

PUBLIC COMMENTS:

In-Person: For those interested in participating during the Public Comment period(s) or public testimony period for Public Hearings of the Planning Commission meetings, you may address the Planning Commission in person the day of the meeting. Speakers will be required to complete a speaker card provided at the door and submit it to Alexis Huerta prior to each Public Comment announcement period. Staff will number and call each speaker card in the order received.

Via Email: The public may also submit emailed comments via the following email address: pcpubliccomment@montebelloca.gov up until the day of the meeting, Tuesday, January 16, 2024 by 3:00 p.m. These comments will be submitted to all members of the Planning Commission and will not be read aloud, but will be entered into the record of the proceedings to the extent they relate to matters listed on the posted agenda or otherwise address matters/issues within the subject matter jurisdiction of the Planning Commission. Any requests to provide public comment which is submitted after the deadlines indicated above will not be submitted to the Planning Commission, with the exception of non-agenda written item comments which will be held over for the next regularly scheduled meeting.

RULES OF DECORUM:

Pursuant to Section 54957.95 of the Government Code, the presiding member of the legislative body conducting a meeting, or their designee, is authorized to remove, or cause the removal of, an individual for disrupting the meeting. Any such removal will be preceded by a warning to the disruptive individual by the presiding member of the legislative body or their designee that the individual's behavior is disrupting the meeting and that the individual's failure to promptly cease their disruptive behavior may result in their removal.

AGENDA MATERIALS: The agenda and agenda packet related to items on this agenda are available for public inspection at City's website at: Agendas, Minutes, and Videos,

IN CONSIDERATION OF OTHERS, PLEASE TURN OFF, OR MUTE, ALL CELL PHONES AND PAGERS
THANK YOU FOR YOUR COOPERATION

CALL TO ORDER

ROLL CALL

PLEDGE OF ALLEGIANCE

PUBLIC COMMENTS (30 MINUTES)
At this time, the general public may address the Commission/Committee on any items listed on the Agenda, including items not listed on the Agenda (Non-Agenda Items) that are within subject matter jurisdiction. Please be aware that the maximum time allotted for members of the public to speak shall not exceed three (3) minutes per person. State Law prohibits the Commission/ Committee from taking action or entertaining extended discussion on a topic not listed on the agenda. Please show courtesy to others and direct all of your comments to the Chairperson.

STAFF COMMUNICATIONS

1. Introduction from City Manager Raul Alvarez.

PUBLIC HEARING

2. Modification of Conditional Use Permit ("CUP") No. 2-64 (Case No. PC-2023-0014-CUP-M1) for Montebello Plymouth Congregational Church (the "Applicant") to establish a surface parking lot at an existing vacant lot located at 141 S.10th Street (the "Vacant Lot") providing supplemental parking for the existing church located at 149 S. 10th Street (the "Church"), and to establish ingress/egress from the Church to the public right-of-way, and construct a driveway to access the new surface parking lot; the Applicant also requests other minor improvements such as replacing non-conforming accessible parking and ramps on the Vacant Lot and the Church site (collectively referred to as the "Project Site").

RECOMMENDATION: It is recommended that the Planning Commission conduct a public hearing and take the following action:

1. ADOPT Resolution No. 21-23 approving a modification to Conditional Use Permit No. 2-64 (Case No. PC-2023-0014-CUP-M1), subject to certain findings and conditions to incorporate parking lot improvements to a vacant lot at the property located at 141 S. 10th Street and 149 S. 10th Street and
2. DETERMINE AND FIND that the project (ENV No. 17-23-CE) is categorically exempt from the California Environmental Quality Act (CEQA) pursuant to CEQA Guidelines Section (15311) Accessory Structures as it pertains to the construction or placement of minor structures.

3. Conditional Use Permit ("CUP") Case No. PC-2023-0003-CUP to demolish an existing car wash located at 113 N. Garfield Avenue ("Project Site") and construct a new two-story express car wash and car polisher at the Project Site.

RECOMMENDATION: It is recommended that the Planning Commission conduct a public hearing and take the following action:

1. ADOPT Resolution No. 23-23 approving the demolition of the existing carwash and allow the construction of a new two-story carwash with conditions for the property located at 113 N. Garfield Avenue and make related findings that the proposed project is consistent with the Montebello General Plan; and
2. DETERMINE AND FIND that the project (ENV No. 2-23-CE) is categorically exempt from the California Environmental Quality Act (CEQA) pursuant to CEQA Guidelines Section 15332 – In-fill Development Projects.

4. **Site Plan Review ("SPR") (Case No. PC-2023-0017-SPR) to allow the installation of a new 7,150 square foot pre-manufactured metal warehouse for general storage of furniture and auto parts for Ford of Montebello pursuant to Montebello Municipal Code Chapter 17.74 et seq. (Site Plan Review), on an existing lot located at 652 South Maple Avenue.**

RECOMMENDATION: It is recommended that the Planning Commission conduct a public hearing and take the following action:

1. ADOPT Resolution No. 22-23 Approving the Site Plan Review ("SPR") No. PC-2023-0017-SPR with conditions to allow the installation of a new 7,150 square foot pre-manufactured metal warehouse (the "Project") for the property located at 652 South Maple Avenue (the "Project Site") with conditions pursuant to Montebello Municipal Code ("MMC") Chapter 17.74 - Site Plan Review; and
2. DETERMINE AND FIND that the project (ENV No. 15-23-CE) is exempt from the California Environmental Quality Act (CEQA) pursuant to CEQA Guidelines Section (15332) - Class 32 (In-Fill Development) as it meets the conditions set forth under class 32 (In-Fill Development Projects).

PLANNING COMMISSION ORALS

Planning Commission member announcements; requests for future agenda items; conference/meetings reports.

ADJOURNMENT

The City of Montebello Planning Commission will adjourn to the next Regular Meeting on February 6, 2024 at 6:30 p.m. at City Hall Council Chambers located at 1600 W. Beverly Boulevard, Montebello, CA 90640.

I, Alexis Huerta, Senior Administrative Assistant for the City of Montebello, hereby certify that a copy of this agenda has been posted on or before Thursday, January 11, 2024 at 5:30 p.m.

Alexis Huerta

_____

Alexis Huerta, Senior Administrative Assistant

ITEM # 2

CITY OF MONTEBELLO
PLANNING COMMISSION AGENDA STAFF REPORT

TO: Members of the Planning Commission

FROM: Joseph Palombi, Planning & Community Development Director

BY: Grace Hayashi, Assistant Planner

SUBJECT: **Modification of Conditional Use Permit ("CUP") No. 2-64 (Case No. PC-2023-0014-CUP-M1) for Montebello Plymouth Congregational Church (the "Applicant") to establish a surface parking lot at an existing vacant lot located at 141 S.10th Street (the "Vacant Lot") providing supplemental parking for the existing church located at 149 S. 10th Street (the "Church"), and to establish ingress/egress from the Church to the public right-of-way, and construct a driveway to access the new surface parking lot; the Applicant also requests other minor improvements such as replacing non-conforming accessible parking and ramps on the Vacant Lot and the Church site (collectively referred to as the "Project Site").**

DATE: January 16, 2024

RECOMMENDATION(S):

It is recommended that the Planning Commission conduct a public hearing and take the following action:

1. ADOPT Resolution No. 21-23 approving a modification to Conditional Use Permit No. 2-64 (Case No. PC-2023-0014-CUP-M1), subject to certain findings and conditions to incorporate parking lot improvements to a vacant lot at the property located at 141 S. 10th Street and 149 S. 10th Street and
2. DETERMINE AND FIND that the project (ENV No. 17-23-CE) is categorically exempt from the California Environmental Quality Act (CEQA) pursuant to CEQA Guidelines Section (15311) Accessory Structures as it pertains to the construction or placement of minor structures.

FISCAL IMPACT:

None.

BACKGROUND:

On February 17, 1964, the Planning Commission approved CUP-2-64 to allow the construction and use of church facilities in the R-3 zone.

On December 6, 1982, the Planning Commission considered and approved a modification of CUP-2-64 to allow a building expansion to the entry area that faced Los Angeles Avenue. The Planning Commission allowed the addition to encroach into the required ten (10) foot side yard and found it reasonable to encroach into the side yard requirements given the existing side yard of the neighboring triplex which is (2'-9") and the limited scale of the proposed addition.

On July 2, 1984, the Planning Commission considered and approved a modification to CUP-2-64 to allow for the addition of a foyer, bathrooms and larger alter area to the existing church buildings. Under the new design, the main entry to the chapel was changed from the south end of the building (facing Los Angeles Street) to the north end, with access from the Greenwood Avenue parking lot. Since the Los Angeles Street façade no longer served as the main entry way into the chapel, it was redesigned with a low profile (one story) addition to the chapel extending to within (4'-8") of the property line.

On October 15, 1984, the Planning Commission considered and approved a modification to CUP-2-64 to allow the extension of the entire church frontage on Los Angeles Avenue (two story) to within 3' 4" of the property line.

On May 2, 2022, Montebello Plymouth Congregational Church (the "Applicant") filed an application (PC-2023-0014-CUP) for a modification to an existing Conditional Use Permit (CUP-2-64) to incorporate parking lot improvements to a vacant lot.

On October 4, 2023, the Applicant resubmitted updated site plans per Planning Department comments and corrections.

On October 24, 2023, the Applicant signed and submitted a waiver and release of liability agreement to go through the administrative process concurrently with the Planning Commission review.

PROJECT DESCRIPTION

The proposed project is a vacant lot owned by the church located at 141 S. 10 Street, which will serve as supplemental parking for the adjacent church located at 149 S. 10th Street. The Montebello Plymouth Congregational Church owns three parcels, including 149 S. 10th Street, 141 S. 10th Street, and 137 S.10th Street, which is the Pastor's

property and is not a part of the project. Additionally, the Applicant is proposing to replace non-conforming accessible parking and ramps, as well as install a new path of travel from the front door of the church to the public right-of-way. A new concrete driveway to the new parking lot from 10th street will be installed along with the construction of a new curb, gutter, and sidewalk in replacement of the existing driveway located south of the proposed driveway. In this request, no changes to the existing church facility are being proposed.

In addition, the project will provide three (3) fully compliant accessible parking stalls and one (1) van stall, a ramp from accessible parking to the front door, and a path of travel to the public right-of-way. The project site currently provides forty-six (46) parking spaces and with the proposed improvements, the project will provide a total of fifty-four (54) parking spaces after the project. The new area of paving is approximately 4,875 square feet. This includes the new asphalt and concrete paved areas. The planting area on the new parking site will be 1,220 square feet. For reference, the project site plan is enclosed as ("Attachment B") of the Staff Report. The Applicant has submitted a Waiver and Release Form to allow them to submit for the Building Plan Check process concurrently with the review of the Planning Commission. Additionally, the project will be subject to a lot tie in which 141 S. 10th Street ("Project Site") will be tied to 149 S. 10th Street that will be done administratively with the Public Works Department.

PROJECT /APPLICANT INFORMATION

Project Location: 141 S. 10th Street and 149 S. 10th Street
Project Applicant: Montebello Plymouth Congregational Church
Property Owner: Montebello Plymouth Congregational Church
General Plan Designation: High-Density Residential
Zoning: R-3 (Multiple-Family Residential Zone)
Existing Use on Property: Vacant

PROJECT SITE

The surrounding zoning and land uses are listed as follows:

Direction	Zone	Land Use
North	R-3	Multiple-Family Residential
South	R-3	Multiple-Family Residential
East	R-3	Multiple-Family Residential
West	R-3	Multiple-Family Residential

GENERAL PLAN

The proposed project is consistent with, among other things, the following goals, and policies of the General Plan:

Policy/Goal	Description
Land Use Element: Goal #1	"To formulate a plan which is responsive to the needs of the community, and which permits the orderly arrangement of land uses, permitting sufficient areas for reasonable development;"
Circulation Element Goal #1	"To facilitate traffic movement and alleviate congestion in and around the City".

The proposed modification conforms with the City of Montebello General Plan, Land Use Element and Circulation Element in that the proposed project will provide additional off-street parking for the existing church. In addition, the proposed improvements will allow for improved circulation on and off the project site and alleviate congestion of parked vehicles in the surrounding residential neighborhood resulting from the church services.

FINDINGS - CONDITIONAL USE PERMIT (MODIFICATION)

Pursuant to MMC Section 17.70.130 (Modification), any condition imposed upon the granting of a conditional use permit may be modified or eliminated, or new conditions may be added; provided, that the granting body shall first conduct a public hearing in the same manner as required for the granting of the original permit.

No such modification shall be made unless the commission finds that such modification is necessary to protect the public interest and/or adjacent or abutting properties; or, in case of deletion of an existing condition, that such action is necessary to permit reasonable operation and use under the conditional use permit.

In addition, pursuant to Section 17.70.070 of the MMC, before any CUP shall be granted, all of the following findings must be made:

A. The site for the proposed use is adequate in size and shape;

The Project Site located at 141 S. 10th Street (vacant lot) abuts the adjacent flag lot 149 S. 10th Street (Church) known as Montebello Plymouth Congregational Church. The vacant lot is rectangular in shape and is ideal to accommodate additional parking and will improve on-site vehicular circulation throughout the properties (14 S. 10th Street & 149 S. 10th Street). Although the existing on-site parking situation is currently manageable, the additional parking (including new, compliant accessible parking and ramps) will enhance the ability for members of the church, visitors, and staff to better access the church services.

B. The site has sufficient access to streets and highways, and is adequate in width and pavement type to carry the quantity and quality of traffic generated by the proposed use;

The Project Site will have access from W. Los Angeles Avenue and Greenwood Avenue. The church also has two small parking lots located to the south of the property but will not have direct vehicular access to the proposed parking lot (vacant lot). The relocated

driveway approach will be designed to comply with the Department of Public Works/Engineering development standards for new driveway aprons.

C. How the proposed use will not have an adverse effect upon adjacent or abutting properties;

The Montebello Plymouth Congregational Church owns, self-operates, and occupies the properties immediately adjacent to the vacant parcel. They are proposing the new parking lot setback from W. Los Angeles Avenue to respect the neighborhood feel. There will be no parking spaces directly facing any abutting residential homes. The Montebello Plymouth Congregational Church is not requesting approvals to modify the existing church operations or building; the proposed parking lot will aid in providing more on-site parking and improve circulation throughout the properties and should not generate any additional traffic.

D. How the proposed use will meet the general purpose and intent of the Zoning Code and how it will be consistent with the General Plan;

The Zoning Code and General Plan allows the church and parking use on these properties through an original Conditional Use Permit No. 2-64. The new parking lot extension will only allow for an orderly arrangement of parking and vehicular circulation. The proposed improvements will provide additional parking to an existing use that is complementary to the existing adjacent uses. As a community church, this project will improve access for the residences within the neighborhood.

ENVIRONMENTAL:

The proposed Modification of Conditional Use Permit No. 2-64 (Case No. PC-2023-0014-CUP-M1) is considered a “project,” per the California Environmental Quality Act (“CEQA”) definition of a “project.” Pursuant to the provisions of the CEQA Section 15311, the project is considered covered by “Accessory Structures”, a Class 11 Categorical Exemption. Class 11 construction or placement of minor structures accessory to (appurtenant to) existing commercial, industrial, or institutional facilities, including but not limited to: on-premises signs; small parking lots; placement of seasonal or temporary use items such as lifeguard towers, mobile food units, portable restrooms, or similar items in generally the same locations from time to time in publicly owned parks, stadiums, or other facilities designed for public use. Examples of this exemption include but are not limited to appurtenant signs; landscaped public or private parking, if no more than four spaces.

ANALYSIS:

None.

SUMMARY:

REPORTS RECEIVED

On June 2, 2022, the application materials for Case Number PC-2023-0014-CUP-M1 were forwarded to the Building and Safety, Public Works, Parks and Recreation, Traffic,

and Police Departments for review, comments, and conditions. No significant comments or conditions were made during the Department Review period.

PUBLIC NOTIFICATION

Pursuant to MMC Section 17.78 (Public Hearings, Notices, and Appeals), the following noticing was performed:

- On November 22, 2023, Public Hearing Notice was published in the Daily Journal (Whittier Daily News); and
- On November 22, 2023, Public Hearing Notice was mailed to all property owners within a 300-foot radius from the exterior boundaries of project site.

ATTACHMENT(S)

1. Resolution No. 21-23 (PC-2023-0014-CUP-M1)
2. Project Site Plan
3. Notice of Exemption

CITY OF MONTEBELLO
PLANNING COMMISSION

RESOLUTION NO. 21-23

A RESOLUTION OF THE PLANNING COMMISSION OF THE CITY OF MONTEBELLO, CALIFORNIA, APPROVING MODIFICATION TO CONDITIONAL USE PERMIT NO. 2-64 (CASE NO. PC-2023-0014-CUP-M1) FOR THE MONTEBELLO PLYMOUTH CONGREGATIONAL CHURCH TO ESTABLISH A SURFACE PARKING LOT TO AN EXISTING VACANT LOT PROVIDING SUPPLEMENTAL PARKING FOR THE CHURCH, ESTABLISH INGRESS/EGRESS FROM THE CHURCH TO THE PUBLIC RIGHT-OF-WAY, AND CONSTRUCT A DRIVEWAY TO ACCESS THE NEW SURFACE PARKING LOT; THE APPLICANT ALSO REQUESTS OTHER MINOR IMPROVEMENTS SUCH AS REPLACING NON-CONFORMING ACCESSIBLE PARKING AND RAMPS ON THE PROPERTY LOCATED AT 141 S. 10TH STREET AND 149 S. 10TH STREET AND ADOPTING A NOTICE OF EXEMPTION UNDER CEQA § 15311 (ACCESSORY STRUCTURES)

WHEREAS, a Conditional Use Permit ("CUP") (PC-2023-0014-CUP-M1) application has been received and accepted; and

WHEREAS, the CUP would allow the Montebello Plymouth Congregational Church to incorporate parking lot improvements to a vacant lot at the property located at 141 S. 10th Street and 149 S. 10th Street ("Project Site"); and

WHEREAS, on May 2nd, 2022, Montebello Plymouth Congregational Church ("Applicant") filed a CUP application (PC-2023-0014-CUP-M1) to allow for the modification to existing CUP 2-64 to incorporate parking lot improvements to a vacant lot at the Project Site ("Project"); and

WHEREAS, per Montebello Municipal Code (MMC) Section 17.70.130, any condition imposed upon the granting of a conditional use permit may be modified or eliminated, or new conditions may be added; provided, that the granting body shall first conduct a public hearing in the same manner as required for the granting of the original permit; and

WHEREAS, pursuant to Section 21067 of the Public Resources Code, and Section 15367 of the State California Environmental Quality Act (CEQA) Guidelines (Cal. Code

Regs., tit. 14, § 15000 et seq.), the City of Montebello is the lead agency for the proposed Project; and

WHEREAS, the CUP (PC-2023-0014-CUP-M1) is considered a "project," as per the CEQA definition of a "project"; and

WHEREAS, the Project here is Categorically Exempt per CEQA Section §15311, Class 11 (Accessory Structures) because there will be minor construction or placement of minor structures accessory to existing commercial, industrial, or institutional facilities; including but not limited to: small parking lots; and

WHEREAS, a duly noticed public hearing has been held, at which the Planning Commission received and considered staff presentations, recommendations, public testimony, and all other matters presented at the public hearing and included in the record for this matter, and all other legal prerequisites to the adoption of this Resolution have occurred; and

WHEREAS, all other legal prerequisites to the adoption of this Resolution have occurred.

NOW THEREFORE, the Planning Commission of the City of Montebello hereby finds, declares and resolves as follows:

SECTION 1. RECITALS. The foregoing recitals are true and correct and are hereby incorporated as substantive findings in this Resolution.

SECTION 2. FINDINGS.

A. Per MMC 17.70.070 the proposed use must meet CUP findings and determine if the use:

1. *The site for the proposed use is adequate in size and shape;*

   The Project Site located at 141 S. 10th Street (vacant lot) abuts the adjacent flag lot 149 S. 10th Street (Church) known as Montebello Plymouth Congregational Church. The vacant lot is rectangular in shape and is ideal to accommodate additional parking and will improve on-site vehicular circulation throughout the properties (14 S. 10th Street & 149 S. 10th Street). Although the existing on-site parking situation is currently manageable, the additional parking (including new, compliant accessible parking and ramps)

will enhance the ability for members of the church, visitors, and staff to better access the church services.

2. *The site has sufficient access to streets and highways, and is adequate in width and pavement type to carry the quantity and quality of traffic generated by the proposed use;*

   The Project Site will have access from W. Los Angeles Avenue and Greenwood Avenue. The church also has two small parking lots located to the south of the property but will not have direct vehicular access to the proposed parking lot (vacant lot). The relocated driveway approach will be designed to comply with the Department of Public Works/Engineering development standards for new driveway aprons.

3. *How the proposed use will not have an adverse effect upon adjacent or abutting properties;*

   The Montebello Plymouth Congregational Church owns, self-operates, and occupies the properties immediately adjacent to the vacant parcel. They are proposing the new parking lot setback from W. Los Angeles Avenue to respect the neighborhood feel. There will be no parking spaces directly facing any abutting residential homes. The Montebello Plymouth Congregational Church is not requesting approvals to modify the existing church operations or building; the proposed parking lot will aid in providing more on-site parking and improve circulation throughout the properties and should not generate any additional traffic.

4. *How the proposed use will meet the general purpose and intent of the Zoning Code and how it will be consistent with the General Plan;*

   The Zoning Code and General Plan allows the church and parking use on these properties through an original Conditional Use Permit No. 2-64. The new parking lot extension will only allow for an orderly arrangement of parking and vehicular circulation. The proposed improvements will provide additional parking to an existing use that is complementary to the existing adjacent uses. As a community church, this project will improve access for the residences within the neighborhood.

Policy/Goal	Description

Land Use Element: Goal #1	"To formulate a plan which is responsive to the needs of the community, and which permits the orderly arrangement of land uses, permitting sufficient areas for reasonable development;"
Circulation Element Goal #1	"To facilitate traffic movement and alleviate congestion in and around the City".

The proposed modification conforms with the City of Montebello General Plan, Land Use Element and Circulation Element in that the proposed use will provide an additional off-street parking lot to alleviate congestion of parked vehicles in the surrounding residential neighborhood resulting from the church services and it is in an appropriate location that does not exceed residential density standards.

SECTION 3. CEQA. The Planning Commission approves and adopts the CEQA Categorical Exemption § 15311 (Accessory Structures) Class 11 exemption. A Class 11 exemption under CEQA § 15311 is the construction or placement of minor structures accessory to (appurtenant to) existing commercial, industrial, or institutional facilities, including but not limited to: on-premises signs; small parking lots; placement of seasonal or temporary use items such as lifeguard towers, mobile food units, portable restrooms, or similar items in generally the same locations from time to time in publicly owned parks, stadiums, or other facilities designed for public use. There will be no expansion to the interior or exterior of the existing church in the proposed Project.

SECTION 4. APPROVALS. The Planning Commission hereby approves a modification to an existing CUP (Case No. PC-2023-0014-CUP-M1) to incorporate parking lot improvements to a vacant lot subject to the conditions of approval set forth in Section 5 of this Resolution.

SECTION 5. CONDITIONS. The Planning Commission finds that the foregoing conditions of approval are necessary and appropriate.

A. Standard Conditions

1. All applicable conditions of approval from previous entitlements on the property shall remain in full force and effect, unless otherwise specifically noted in this Resolution.

2. The Applicant shall defend, indemnify, and hold harmless the City, its elected and appointed officials, agents, officers, and employees from any claim, action, or proceeding brought against the City, its elected and appointed officials, agents, officers, or employees arising out of, or which are related to the Applicant's project or application (collectively referred to as "proceedings"). The indemnification shall include, but not be limited to, damages, fees and/or costs awarded against the City, if any, and cost of suit, attorney's fees, and other costs, liabilities, and expenses incurred or awarded in connection with the proceedings whether incurred by the Applicant, the City and/or the parties initiating or bringing such proceedings. This indemnity provision shall include the Applicant's obligation to indemnify the City for all the City's costs, fees, and damages that the City incurs in enforcing the indemnification provisions set forth herein. The City shall have the right to choose its own legal counsel to represent the City's interest in the proceedings.

3. Within thirty (30) days of the Planning Division transmittal of the Acceptance Form, the Applicant shall sign and return a copy of the Acceptance Form, agreeing to the conditions of approval and acknowledging that failure to comply with such conditions shall constitute grounds for potential revocation of the permit approval. Failure to return the Acceptance Form within thirty (30) days shall constitute grounds for terminating the permit.

4. The Director of Planning & Community Development ("Director"), at any time, can call for a review of the approved conditions of approval at a duly noticed public hearing before the Planning Commission. These condition(s) may be modified, or new condition(s) added to reduce any impacts of the use.

5. Minor modifications to the development plans shall be allowed subject to the review and approval of the Director or the assigned designee. The modifications must be in substantial conformance with the approved project.

6. The Applicant or successor in interest shall meet the applicable code requirements and all other City department regulations.

7. In the event the Applicant violates or fails to comply with any conditions of approval of this permit, no further permits, licenses, approvals, or certificate of occupancy shall be issued until such violation(s) has been fully remedied.

8. Construction shall only occur between the hours of 7:00 a.m. and 8:00 p.m. Monday thru Friday, and 9:00 a.m. to 6:00 p.m. on Saturdays, Sundays, and legal holidays, except in the case of an emergency where such action is immediately

required to prevent injuries to persons or damage to property, as determined by the Building Official.

9. A sign shall be posted on the property, subject to the review of the Planning Manager, which shall identify the address and phone number of the owner and/or primary contact for the purposes of responding to questions and complaints during the construction period and shall indicate the hours of construction work.

10. The Applicant, Owner, Management and/or successor of the use shall bear full cost of all monitoring and inspection activities to be conducted by City staff or its designated consultant representative(s) as necessary to ensure compliance with the conditions of this Resolution.

11. Any change, expansion, intensification and/or modification to the proposed plans use, or mode of operations shall be subject to the review and approval by the Director who may take action or call for review by the Montebello Planning Commission ("Planning Commission") at a noticed public hearing.

12. This approval shall not supersede the approval of any other responsible agencies. The Applicant shall comply with all Federal, State, and local laws.

13. The approval of the entitlement shall expire if the rights granted are not exercised within one (1) year from the effective date. Exercise of right shall mean issuance of a building permit to commence construction or similar activities demonstrating the intent to proceed with the project, as determined by the Director.

14. A copy of the approved Resolution shall be attached to the construction plans for any site improvement at the submittal of plans for plan check.

15. An updated landscape and irrigation plan prepared by a licensed Landscape Architect will need to be provided which identifies the types of trees, groundcover, and shrubbery to be used at the site. The plans should clearly identify all the site's hardscape features, water features, and planting areas.

    i. The landscape and irrigation plan will need to be compliant with the Model Water Efficient Landscape Ordinance.

    ii. Additionally, the landscape and irrigation plan will need to show that the site is using a permanent underground automated irrigation system.

16. It is the responsibility of the Applicant to have all graffiti on the site removed within twenty-four (24) hours of its appearance or be subject to citation from the City of Montebello Code Enforcement Division.

B. <u>Building Division Conditions</u>

1. The development and utilization of the site shall comply with all the provisions of the current Building, Plumbing, Mechanical, Electrical, Energy, CAL Green, Fire Codes, City Ordinances, as well as additional requirements from the Montebello Building and Safety Division.

C. <u>Public Works Conditions</u>

1. The specifications of the Montebello Public Works Department and the Engineering Division shall be complied with:

    a. The Applicant will continue to work with the Public Works Department to finalize the certification of compliance for the Lot Tie and will, upon request, provide the Public Works Department with any additional information or documentation required.

PASSED AND ADOPTED this 16th day of January 2024 by the Planning Commission.

Commissioner Cuevas:	( ) AYE	( ) NOE	( ) ABSENT	( ) ABSTAIN
Commissioner Morales:	( ) AYE	( ) NOE	( ) ABSENT	( ) ABSTAIN
Commissioner Valdez:	( ) AYE	( ) NOE	( ) ABSENT	( ) ABSTAIN
Commissioner Lomeli:	( ) AYE	( ) NOE	( ) ABSENT	( ) ABSTAIN
Commissioner Medina:	( ) AYE	( ) NOE	( ) ABSENT	( ) ABSTAIN

_____
Victor Cuevas, Chair

ATTEST:

_____
Joseph A. Palombi, Director
Planning & Community Development Department

Parking Lot Expansion for
Montebello Plymouth Congregational Church

144 S Greenwood Ave, Montebello, CA 90640

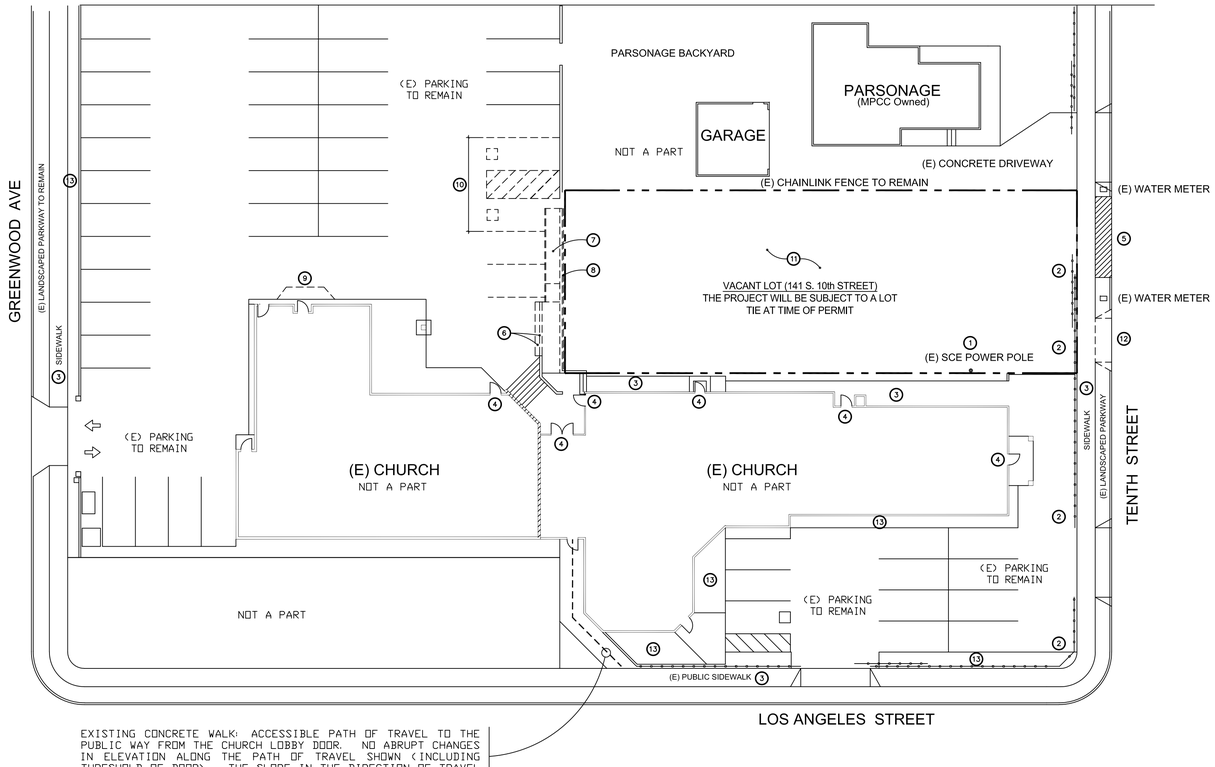

EXISTING CONCRETE WALK: ACCESSIBLE PATH OF TRAVEL TO THE PUBLIC WAY FROM THE CHURCH LOBBY DOOR. NO ABRUPT CHANGES IN ELEVATION ALONG THE PATH OF TRAVEL SHOWN (INCLUDING THRESHOLD OF DOOR). THE SLOPE IN THE DIRECTION OF TRAVEL SHALL NOT EXCEED 5% AND 2% CROSS SLOPE

EXISTING SITE PLAN (& DEMOILTION PLAN)

N

DEMOLITION NOTES

1. THESE DEMOLITION PLANS AND NOTES ARE A GENERAL DESCRIPTION OF EXISTING CONSTRUCTION WHICH MUST BE PERMANENTLY REMOVED TO CONSTRUCT THE REMODEL WORK REQUIRED BY THIS PROJECT. THE CONTRACTOR IS RESPONSIBLE FOR REVIEWING THE COMPLETE WORK TO BE DONE AND SHALL REMOVE ALL EXISTING CONSTRUCTION REQUIRED FOR THE INSTALLATION AND CONSTRUCTION OF NEW WORK.
2. THE CONTRACTOR SHALL FILL ALL WALL OPENINGS RESULTING FROM THE DEMOLITION PROCESS. PROVIDE FLOOR OR WALL CONSTRUCTION MATCHING THE EXISTING.
3. CUTTING AND PATCHING OF EXISTING CONSTRUCTION, IN ADDITION TO THE DEMOLITION WORK SHOWN, SHALL BE PERFORMED AS REQUIRED FOR THE INSTALLATION OF NEW WORK. CUTTING AND PATCHING MAY BE REQUIRED IN AND OUT OF THE WORK AREA, INCLUDING, BUT NOT LIMITED TO SURFACES ADJACENT TO THE WORK AREA.
4. DO NOT DISTURB ANY BUILDING STRUCTURAL COLUMNS OR BEAMS OR ANY OTHER STRUCTURAL ELEMENTS. DO NOT DISCONNECT ANY BUILDING MECHANICAL, PLUMBING, OR ELECTRICAL SYSTEMS AFFECTING ANY SERVICES OUTSIDE OF THE PROJECT AREA.

SITE PLAN KEYNOTES

1. CONTRACTOR TO COORDINATE REMOVAL OF POWER POLE WITH SCE
2. (E) W.I FENCE AND GATE TO REMAIN (PROTECT IN PLACE)
3. (E) SIDEWALK TO REMAIN
4. (E) DOOR AND STOOP TO REMAIN
5. (D) PORTION OF SIDEWALK FOR NEW DRIVEWAY CURBCUT
6. (D) CMU SCREENWALL AND CONCRETE BENCH
7. (D) NON-CONFORMING RAMP & HANDRAILS
8. (D) PORTION OF CHAINLINK FENCE
9. (D) CONCRETE PAVING
10. PREPARE AC PAVING FOR ACCESSIBLE PARKING & LOADING (REMOVE EXISTING NON-CONFORMING PARKING)
11. SCARIFY GRADE AS NECESSARY FOR NEW PARKING
12. (D) EXISTING DRIVEWAY AND PREPARE FOR NEW CURB & GUTTER
13. (E) LANDSCAPING TO REMAIN

SHEET INDEX

ARCHITECTURAL

A0.1	EXISTING SITE PLAN, PROJECT DATA
A1.0	SITE PLAN
A5.1	DETAILS
A5.2	DETAILS
A5.3	DETAILS
L1.1	LANDSCAPING

SCOPE OF WORK

PARKING LOT IMPROVEMENTS TO A VACANT LOT TO SERVE THE ADJACENT CHURCH (SUPPLEMENTAL PARKING). THIS PROJECT ALSO REPLACES NON-CONFORMING ACCESSIBLE PARKING AND RAMPS WITH NEW FULLY COMPLIANT ACCESSIBLE PARKING AND RAMPS. A NEW PATH OF TRAVEL FROM THE FRONT DOOR OF THE CHURCH TO THE PUBLIC WAY WILL BE FURNISHED. A NEW DRIVEWAY TO THE NEW PARKING LOT FROM 10TH STREET WILL BE PROVIDED; AN EXISTING AND ABANDONED DRIVEWAY WILL BE REMOVED AND NEW CURB & GUTTER IS A PART OF THIS PROJECT. THERE WILL BE NO SCOPE TO THE CHURCH BUILDING.

PROJECT INFORMATION

ZONE: R-3 (MULTI-FAMILY RESIDENTIAL)

EXISTING LOT: VACANT LOT (141 S. 10th Street)
CHURCH LOT (144 S. Greenwood Ave.)

PARKING: 48 TOTAL PARKING STALLS BEFORE PROJECT
54 TOTAL PARKING STALLS AFTER PROJECT

PARKING REQUIRED: 1 STALL PER 35 SF OF ASSEMBLY AREA
46 STALLS: 1,600 SF / 35 SF

AREA OF PAVING: 4,875 SF (APPROX.)

PARKING AND PATH OF TRAVEL: PROJECT PROVIDES (3) FULLY COMPLIANT ACCESSIBLE PARKING STALLS (1 VAN), RAMP FROM ACCESSIBLE PARKING TO FRONT DOOR, AND PATH OF TRAVEL TO THE PUBLIC WAY

PLANTING AREA (ON NEW PARKING SITE): 1,220 SF

CODE COMPLIANCE

CONSTRUCTION SHALL CONFORM TO ALL GOVERNMENTAL AGENCIES AND CODES HAVING JURISDICTION, INCLUDING, BUT NOT LIMITED TO:

CITY MUNICIPAL CODE

2019 CALIFORNIA BUILDING CODE W/ LOCAL AMENDMENTS

2019 CALIFORNIA ELECTRICAL CODE W/ LOCAL AMENDMENTS

2019 CALIFORNIA MECHANICAL CODE W/ LOCAL AMENDMENTS

2019 CALIFORNIA PLUMBING CODE W/ LOCAL AMENDMENTS

2019 CALIFORNIA FIRE CODE W/ LOCAL AMENDMENTS

2019 BUILDING ENERGY EFFICIENCY STANDARDS STATE TITLE 24 REGULATIONS (T-24-6)

2019 CALIFORNIA GREEN BUILDING STANDARDS CODE W/ LOCAL AMENDMENTS

VICINITY MAP (NTS)

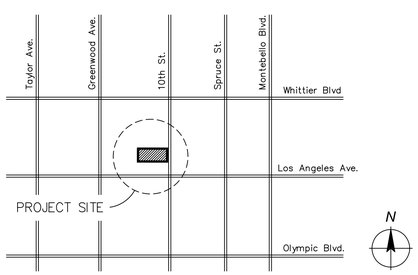

GENERAL NOTES

GENERAL

THE DESIGN PROFESSIONAL WHO PREPARED THESE DRAWINGS IS NOT RESPONSIBLE FOR THE MISUSE OF, OR UNAUTHORIZED CHANGES MADE TO THESE DRAWINGS. THE CONTRACTOR SHALL OBTAIN WRITTEN PERMISSION FROM THE DESIGN PROFESSIONAL WHO PREPARED THESE DRAWINGS PRIOR TO MAKING CHANGES.

THE CONTRACTOR SHALL:

OBTAIN RELEVANT PERMITS AND APPROVALS REQUIRED BY GOVERNING AGENCIES PRIOR TO COMMENCING WORK.

ASSUME SOLE AND COMPLETE RESPONSIBILITY FOR JOB SITE CONDITIONS DURING THE COURSE OF CONSTRUCTION FOR THE PROJECT, INCLUDING SAFETY OF ALL PERSONS AND PROPERTY. THIS REQUIREMENT APPLIES CONTINUOUSLY, AND IS NOT LIMITED TO NORMAL WORKING HOURS.

HOLD HARMLESS, INDEMNIFY AND DEFEND THE OWNER, THE DESIGN PROFESSIONAL, THEIR CONSULTANTS FROM LIABILITY, REAL OR ALLEGED IN CONNECTION WITH THE PERFORMANCE OF WORK ON THIS PROJECT, EXCEPTING LIABILITY ARISING FROM THE WILLFUL MISCONDUCT OR SOLE NEGLIGENCE OF THE DESIGN PROFESSIONAL.

IF REQUIRED, SUBMIT A TRAFFIC CONTROL PLAN TO THE DEPARTMENT OF PUBLIC WORKS AND OBTAIN APPROVAL PRIOR TO COMMENCING WORK IN THE PUBLIC RIGHT OF WAY.

CONTACT UNDERGROUND SERVICE ALERT AT LEAST 48-HOURS BEFORE EXCAVATING.

PROPERLY MUFFLE EQUIPMENT AND LIMIT CONSTRUCTION HOURS TO 7:00 AM TO 7:00 PM MONDAY THRU FRIDAY, AND 8:00AM TO 7:00PM ON SATURDAY, EXCLUDING HOLIDAYS. THIS RESTRICTION INCLUDES THE STARTUP OF MOTOR VEHICLES AND OTHER HEAVY EQUIPMENT.

REPAIR DAMAGE TO FACILITIES OCCURRING AS A RESULT OF CONSTRUCTION ACTIVITIES TO RETURN THEM TO THEIR CONDITION PRIOR TO CONSTRUCTION.

PROVIDE RECORD DRAWINGS TO THE OWNER'S REPRESENTATIVE WHICH INCLUDE IMPROVEMENTS WHICH DEVIATE FROM AND IMPROVEMENTS NOT SHOWN ON THE ORIGINAL DESIGN DRAWINGS.

GRADING

PROVIDE A MOISTURE BARRIER IN AREAS WHERE CURB AND GUTTER ARE ADJACENT TO LANDSCAPING AND WHERE THE SOIL EXPANSION INDEX IS GREATER THAN 51.

PROVIDE DUST CONTROL THROUGHOUT THE DURATION OF THE CONSTRUCTION PROJECT TO MINIMIZE AIRBORNE POLLUTANTS.

STOP WORK IF CONTAMINATED MATERIAL IS ENCOUNTERED. PREPARE A WORK PLAN AND ACQUIRE APPROVAL IN WRITING FROM THE CITY OF MONTEBELLO FIRE DEPARTMENT AND THE STATE REGIONAL WATER QUALITY CONTROL BOARD PRIOR TO RESUMING WORK.

THE CONTRACTOR SHALL NOT IMPEDE DRAINAGE FROM EXISTING UPSTREAM PROPERTIES. THE CONTRACTOR SHALL PLACE STOCKPILES AWAY FROM CREEK SETBACKS, AWAY FROM VEGETATION DESIGNATED TO REMAIN, A MINIMUM OF 10-FEET FROM ADJACENT EXISTING RESIDENTIAL PARCELS, AND A MINIMUM OF 50-FEET FROM ADJACENT EXISTING RESIDENTIAL PARCELS WHERE THE STOCK PILE DEPTH EXCEEDS 2.5-FEET.

UTILITIES

THE CONTRACTOR SHALL:

EXPOSE EXISTING UTILITIES PRIOR TO TRENCHING TO VERIFY THE ALIGNMENTS AND ELEVATIONS OF THE UTILITIES, AND TO VERIFY DESIGN ASSUMPTIONS. EXISTING UTILITIES MAY REQUIRE RELOCATION AND/OR PROPOSED IMPROVEMENTS MAY REQUIRE GRADE OR ALIGNMENT REVISION DUE TO FIELD CONDITIONS. IF THE EXPOSED UTILITY IS DETERMINED TO BE IN A LOCATION WHICH IS NOT REFLECTED BY THE CONSTRUCTION DOCUMENTS, NOTIFY THE ENGINEER IN WRITING SO THAT APPROPRIATE ADJUSTMENTS CAN BE MADE.

REPORT UTILITY CONFLICTS TO THE OWNER'S REPRESENTATIVE IN WRITING AS THEY ARE ENCOUNTERED SO THAT THE OWNER AND OWNER'S REPRESENTATIVE CAN MAKE A DECISION AS TO HOW THE CONTRACTOR SHOULD PROCEED WITH THE WORK.

COORDINATE WITH UTILITY COMPANIES, FURNISH, INSTALL, TEST AND OBTAIN INSPECTIONS FOR UNDERGROUND IMPROVEMENTS PRIOR TO SURFACING.

EXISTING UNDERGROUND FACILITIES SHOWN ON THESE DRAWINGS ARE APPROXIMATE AND HAVE BEEN LOCATED BASED ON TOPOGRAPHIC FEATURES OR AVAILABLE INFORMATION. THE PROFESSIONAL PREPARING THIS MAP AND THE OWNER ASSUME NO RESPONSIBILITY FOR THE ACCURACY OF THESE FACILITIES OR FOR THE INADVERTENT OMISSION OF RELATED INFORMATION.

THE CONTRACTOR IS CAUTIONED NOT TO ORDER PRECAST ITEMS OR INSTALL IMPROVEMENTS UNTIL CONFLICTS ARE RESOLVED. IMPROVEMENTS INSTALLED OR ORDERED PRIOR TO CONFLICT RESOLUTION SHALL BE DONE SOLELY AT THE CONTRACTOR'S RISK AND AT NO EXPENSE TO THE OWNER.

UTILITY CONFLICTS MAY OCCUR IN THOSE INSTANCES WHERE TWO GRAVITY UTILITIES CROSS AND LACK THE REQUIRED SEPARATION, OR IN THOSE INSTANCES WHERE AN EXISTING UTILITY HAS NOT BEEN IDENTIFIED IN THE CONSTRUCTION DOCUMENTS.

MAPPING

THE CONTRACTOR SHALL:

PRESERVE AND PERPETUATE EXISTING SURVEY MONUMENTATION WHICH WILL BE DISTURBED OR REMOVED TO FACILITATE THE PROPOSED IMPROVEMENTS. IF WORK WILL BE CONDUCTED IN AN AREA WHICH RESULTS IN THE DISTURBANCE OF MONUMENTATION, RETAIN THE SERVICES OF A LICENSED LAND SURVEYOR TO LOCATE SAID MONUMENTATION PRIOR TO DISTURBANCE. ADDITIONALLY, RETAIN THE SERVICES OF A LICENSED LAND SURVEYOR TO RE-ESTABLISH MONUMENTATION WHICH HAS BEEN DISTURBED AS A RESULT OF PROJECT CONSTRUCTION AND TO FILE THE APPROPRIATE DOCUMENTATION.

BOUNDARY INFORMATION SHOWN HEREON WERE OBTAINED FROM RECORD DATA OR RECORD DOCUMENTS AND DOES NOT CONSTITUTE A FORMAL BOUNDARY DETERMINATION.

SEDIMENT CONTROL NOTES

THE CONTRACTOR SHALL INTEGRATE APPROPRIATE MEASURES DURING EACH CONSTRUCTION PHASE TO ENSURE THAT SEDIMENT AND OTHER POLLUTANTS DO NOT ENTER THE STORM DRAIN SYSTEM.

THE CONTRACTOR SHALL USE WATER OR DUST PALLIATIVE TO MINIMIZE WIND EROSION. THE CONTRACTOR SHALL DESIGNATE AN AREA ON SITE TO STOCKPILE MATERIAL. THE STOCKPILED MATERIAL SHALL BE COVERED AT ALL TIMES TO PREVENT EROSION FROM WIND, RAIN AND STORM WATER RUNOFF.

EROSION AND SEDIMENT CONTROL MEASURES SHALL BE PLACED IN FRONT OF INCOMPLETE STORM DRAIN SYSTEMS TO PREVENT DEBRIS AND SEDIMENT-LADEN WATER FROM ENTERING INTO THE PUBLIC STORM DRAIN SYSTEM. BEST MANAGEMENT PRACTICES SHALL BE USED WHEN INSTALLING SUCH DEVICES.

THE CONTRACTOR SHALL BE RESPONSIBLE FOR CONSTANT MAINTENANCE OF EROSION AND SEDIMENT CONTROL MEASURES AT ALL TIMES TO THE SATISFACTION OF THE OWNER, AND CITY OF MONTEBELLO. EROSION AND SEDIMENT CONTROL MEASURES AND THEIR INSTALLATION SHALL BE ACCOMPLISHED USING BEST MANAGEMENT PRACTICES.

THE CONTRACTOR WILL BE RESPONSIBLE FOR CLEANING WATER THAT HAS BECOME POLLUTED DUE TO NOT TAKING NECESSARY EROSION AND SEDIMENT CONTROL ACTIONS.

THE CONTRACTOR SHALL BE RESPONSIBLE FOR CLEANUP OF MUD AND DEBRIS CARRIED ONTO SURROUNDING STREETS AND ROADS AS A RESULT OF CONSTRUCTION ACTIVITY.

ANY DENUDED OR DISTURBED SOILS SHALL BE PROTECTED USING BEST MANAGEMENT PRACTICES.

PRIOR TO AND DURING A PRECIPITATION EVENT, ALL PAVED AREAS WILL BE KEPT CLEAR OF EARTH MATERIAL AND DEBRIS. THE SITE IS TO BE MAINTAINED BY THE CONTRACTOR SO THAT A MINIMUM OF SEDIMENT-LADEN RUNOFF LEAVES THE SITE.

THE CONTRACTOR SHALL INFORM ALL CONSTRUCTION SITE WORKERS ABOUT THE MAJOR PROVISIONS OF THE EROSION AND SEDIMENT CONTROL PLAN AND SEEK THEIR COOPERATION IN AVOIDING THE DISTURBANCE OF THESE CONTROL MEASURES.

BEST MANAGEMENT PRACTICES SHALL BE VISUALLY MONITORED ON A WEEKLY BASIS DURING THE DRY SEASON AND RECORDED IN AN INSPECTION CHECKLIST. RAIN EVENT VISUAL MONITORING SHALL BE PERFORMED WITHIN 48 HOURS PRIOR TO AN ANTICIPATED RAIN EVENT, DAILY DURING A RAIN EVENT AND WITHIN 48 HOURS FOLLOWING A RAIN EVENT. REMOVE SEDIMENTS WHEN ACCUMULATIONS REACH 1/3 THE HEIGHT OF THE BARRIER AND REPLACE FILTER DEVICES AS NECESSARY TO ENSURE PROPER FUNCTION.

UNSTABILIZED AREAS WILL BE REPAIRED AS SOON AS POSSIBLE AFTER BEING DAMAGED.

ALL GRADED OR DISTURBED AREAS SHALL BE STABILIZED IMMEDIATELY AFTER GRADING IS COMPLETE.

ENTRANCE TO THE PROJECT SHALL BE MAINTAINED IN A CONDITION THAT WILL PREVENT TRACKING OR FLOWING OF SEDIMENT INTO PUBLIC RIGHT-OF-WAY. WHEN NECESSARY, WHEELS SHALL BE CLEANED TO REMOVE SEDIMENT PRIOR TO ENTRANCE OF PUBLIC RIGHTS-OF-WAY. WHEN WASHING IS REQUIRED IT SHALL BE DONE IN AN AREA STABILIZED WITH CRUSHED ROCK THAT DRAINS INTO A SEDIMENT TRAP.

ALL SEDIMENT SPILLED, DROPPED, OR TRACKED ONTO PUBLIC RIGHTS-OF-WAY SHALL BE REMOVED IMMEDIATELY USING BEST MANAGEMENT PRACTICES.

THE CONTRACTOR SHALL HAVE EROSION AND SEDIMENT CONTROL MEASURES ON SITE ADEQUATE TO PROTECT THE ENTIRE SITE SUCH THAT IT IS IMMEDIATELY AVAILABLE IN PREPARATION OF A PRECIPITATION EVENT.

THE CONTRACTOR SHALL DISPOSE OF UNUSED CONSTRUCTION MATERIALS AND WASTE PRIOR TO THE COMPLETION OF CONSTRUCTION.

REVISION	
	1
	2

LICENSED ARCHITECT JEFFREY OKAMOTO No. C21407 EXP. 11/30/2023 STATE OF CALIFORNIA

MARTINEZ + OKAMOTO architects, inc.
14467 PARK AVE.
VICTORVILLE, CA 92392
FAX: (760) 241-7854
BUS: (760) 241-7858

M:OA architects

Montebello Plymouth Congregational Church
Parking Lot Expansion
144 S Greenwood Ave, Montebello, CA 90640

DATE:	02/13/2022
SCALE:	AS NOTED
DRAWN BY:	MOA West
JOB:	19-30
SHEET TITLE:	EXISTING SITE PLAN
SHEET	A0.1

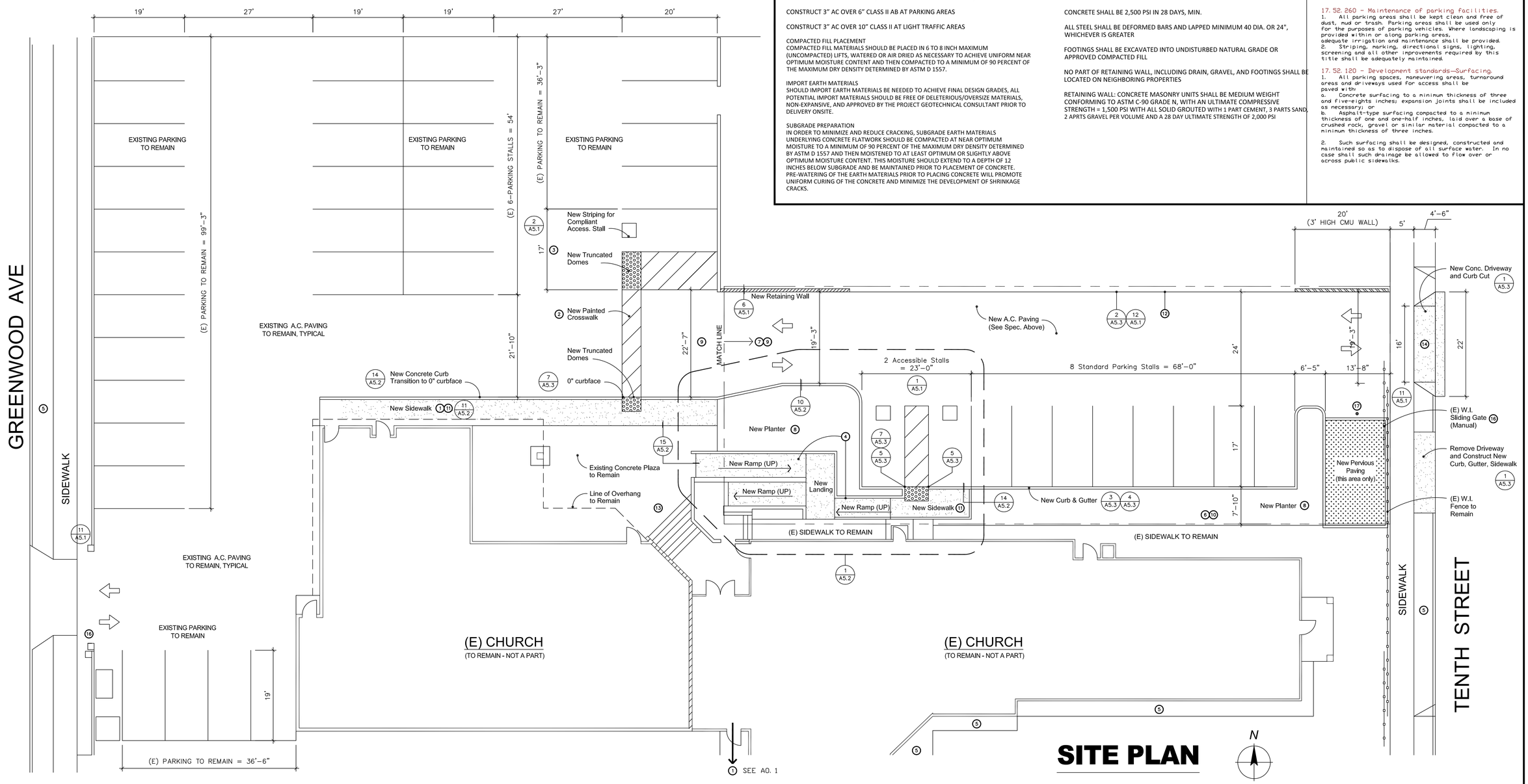

AC PAVING, CONCRETE, and PREPARATION SPECIFICATIONS

CONSTRUCT 3" AC OVER 6" CLASS II AB AT PARKING AREAS

CONSTRUCT 3" AC OVER 10" CLASS II AT LIGHT TRAFFIC AREAS

COMPACTED FILL PLACEMENT
COMPACTED FILL MATERIALS SHOULD BE PLACED IN 6 TO 8 INCH MAXIMUM (UNCOMPACTED) LIFTS, WATERED OR AIR DRIED AS NECESSARY TO ACHIEVE UNIFORM NEAR OPTIMUM MOISTURE CONTENT AND THEN COMPACTED TO A MINIMUM OF 90 PERCENT OF THE MAXIMUM DRY DENSITY DETERMINED BY ASTM D 1557.

IMPORT EARTH MATERIALS
SHOULD IMPORT EARTH MATERIALS BE NEEDED TO ACHIEVE FINAL DESIGN GRADES, ALL POTENTIAL IMPORT MATERIALS SHOULD BE FREE OF DELETERIOUS/OVERSIZE MATERIALS, NON-EXPANSIVE, AND APPROVED BY THE PROJECT GEOTECHNICAL CONSULTANT PRIOR TO DELIVERY ONSITE.

SUBGRADE PREPARATION
IN ORDER TO MINIMIZE AND REDUCE CRACKING, SUBGRADE EARTH MATERIALS UNDERLYING CONCRETE FLATWORK SHOULD BE COMPACTED AT NEAR OPTIMUM MOISTURE TO A MINIMUM OF 90 PERCENT OF THE MAXIMUM DRY DENSITY DETERMINED BY ASTM D 1557 AND THEN MOISTENED TO AT LEAST OPTIMUM OR SLIGHTLY ABOVE OPTIMUM MOISTURE CONTENT. THIS MOISTURE SHOULD EXTEND TO A DEPTH OF 12 INCHES BELOW SUBGRADE AND BE MAINTAINED PRIOR TO PLACEMENT OF CONCRETE. PRE-WATERING OF THE EARTH MATERIALS PRIOR TO PLACING CONCRETE WILL PROMOTE UNIFORM CURING OF THE CONCRETE AND MINIMIZE THE DEVELOPMENT OF SHRINKAGE CRACKS.

CONCRETE SHALL BE 2,500 PSI IN 28 DAYS, MIN.

ALL STEEL SHALL BE DEFORMED BARS AND LAPPED MINIMUM 40 DIA. OR 24", WHICHEVER IS GREATER

FOOTINGS SHALL BE EXCAVATED INTO UNDISTURBED NATURAL GRADE OR APPROVED COMPACTED FILL

NO PART OF RETAINING WALL, INCLUDING DRAIN, GRAVEL, AND FOOTINGS SHALL BE LOCATED ON NEIGHBORING PROPERTIES

RETAINING WALL: CONCRETE MASONRY UNITS SHALL BE MEDIUM WEIGHT CONFORMING TO ASTM C-90 GRADE N, WITH AN ULTIMATE COMPRESSIVE STRENGTH = 1,500 PSI WITH ALL SOLID GROUTED WITH 1 PART CEMENT, 3 PARTS SAND, 2 APRTS GRAVEL PER VOLUME AND A 28 DAY ULTIMATE STRENGTH OF 2,000 PSI

CITY NOTES

17.52.260 - Maintenance of parking facilities.
1. All parking areas shall be kept clean and free of dust, mud or trash. Parking areas shall be used only for the purposes of parking vehicles. Where landscaping is provided within or along parking areas, adequate irrigation and maintenance shall be provided.
2. Striping, marking, directional signs, lighting, screening and all other improvements required by this title shall be adequately maintained.

17.52.120 - Development standards—Surfacing.
1. All parking spaces, maneuvering areas, turnaround areas and driveways used for access shall be paved with:
a. Concrete surfacing to a minimum thickness of three and five-eights inches; expansion joints shall be included as necessary; or
b. Asphalt-type surfacing compacted to a minimum thickness of one and one-half inches, laid over a base of crushed rock, gravel or similar material compacted to a minimum thickness of three inches.

2. Such surfacing shall be designed, constructed and maintained so as to dispose of all surface water. In no case shall such drainage be allowed to flow over or across public sidewalks.

ACCESSIBLE PARKING and LOADING AND SITE ACCESSIBIITY

1. EACH PARKING SPACE FOR THE DISABLED IS REQUIRED TO IDENTIFIED BY A PERMANENT, REFLECTIVE, SIGN WITH THE INTERNATIONAL SYMBOL OF ACCESSIBILITY. THE SIGN IS TO BE EQUAL TO A PORCELAIN ON STEEL SIGN WITH BEADED TEXT; TO BE A MINIMUM SIZE OF 70 SQUARE INCHES; AND IS TO BE 36 INCHES ABOVE THE SURFACE OF THE PARKING SPACE, FINISHED GRADE, GROUND OR SIDEWALK.

2. THE SURFACE OF EACH PARKING SPACE FOR THE DISABLED IS REQUIRED TO HAVE A 3 FOOT SQUARE INTERNATIONAL SYMBOL OF ACCESSIBLITY STENCILED IN BLUE PAINT.

3. AT THE ENTRANCE TO THE OFFSTREET PARKING FACIILTIES, A CONSPICUOUS SIGN AT LEAST 17 INCHES BY 22 INCHES IS REQUIRED. THE LETTERING IS REQUIRED TO BE AT LEAST ONE INCH HIGH STATING: "UNAUTHORIZED VEHICLES NOT DISPLAYING DISTINGUISH-ING PLACARDS OR LICENSE PLATES ISSUED FOR THE PHYSICALLY HANDICAPPED. PERSONS MAY BE TOWED AWAY AT THE OWNER'S EXPENSE. TOWED VEHICLES MAY BE RECLAIMED AT _____ _____OR BY TELEPHONING_____."

4. THE SURFACE OF EA. PARKING SPACE FOR ACCESSIBLE STALLS IS REQUIRED TO HAVE A 3 FT. SQ. "INTERNATIONAL SYMBOL OF ACCESSIBILITY". HANDICAPPED SYMBOL SHALL BE A STENCILED WHITE FIGURE ON BLUE BACKGROUND (COLOR #15090, FEDERAL STANDARD 595A).

5. ACCESSIBLE PARKING STALLS SHALL BE IDENTIFIED BY A PERMANENTLY AFFIXED REFLECTORIZED SIGN DISPLAYING THE INTERNATIONAL SYMBOL OF ACCESSIBILITY. MINIMUM SIZE OF SIGN SHALL BE 70 SQUARE INCHES, CENTERED AT THE INTERIOR OF THE PARKING SPACE CENTERED ON THE WALL AT THE INTERIOR END OF THE PARKING SPACE AT A MINIMUM OF 36 INCHES FROM THE PARKING SPACE FINISHED GRADE, GROUND OR SIDEWALK.

6. A SIGN MUST BE POSTED IN A CONSPICUOUS PLACE AT EACH ENTRANCE TO THE OFF STREET PARKING FACILITY, NOT LESS THAN 17 INCHES BY 22 INCHES, WITH LETTERING NOT LESS THAN 1" IN HEIGHT, STATING "UNAUTHORIZED VEHICLES NOT DISPLAYING DISTINGUISHING PLACARD, OR LICENSE PLATES ISSUED FOR THE PHYSICALLY HANDICAPPED PERSONS MAY BE TOWED AT OWNER'S EXPENSE. TOWED VEHICLES MAY BE RECLAIMED AT _____ OR BY TELEPHONING _____

7. DOORWAYS SHALL HAVE A LEVEL PLATFORM ON EACH SIDE WITH 1/2" THRESHOLD BEVELED MAXIMUM BEVEL OF 1:2 TO 1/4" CHANGE.

8. PROVIDE INTERNATIONAL SYMBOLS OF ACCESSIBILITY ON THE OUTSIDE OF BUILDINGS.

KEYNOTES

1. ACCESSIBLE PATH OF TRAVEL TO THE PUBLIC WAY. NO ABRUPT CHANGES IN ELEVATION ALONG THE PATH OF TRAVEL SHOWN. THE SLOPE IN THE DIRECTION OF TRAVEL SHALL NOT EXCEED 5% AND 2% CROSS SLOPE
2. ACCESSIBLE PATH OF TRAVEL FROM THE ACCESSIBLE VAN PARKING AND LOADING ZONE STALL TO THE ENTRANCE DOOR
3. MODIFY EXISTING NON-CONFORMING ACCESSIBLE PARKING AND LOADING TO MAKE FULLY ACCESSIBLE
4. CONCRETE RAMP, CURB, HANDRAIL
5. (E) LANDSCAPING TO REMAIN
6. CONTRACTOR TO COORDINATE REMOVAL OR RELOCATION OF UTILITY WITH RESPECTIVE AGENCY.
7. ASPHALT CONCRETE PAVING - SEE SPECIFICATIONS FOR SECTION, PROVIDE SMOOTH TRANSITION TO EXISTING AC PAVING
8. (N) LANDSCAPING
9. GRIND THE EXISTING ASPHALT CONCRETE AS REQUIRED TO ACCOMMODATE AND OVERLAY HAVING A MINIMUM DEPTH OF 1.5-INCHES AND A WIDTH OF 4-FEET, WHICH UNIFORMLY CONFORMS WITH THE EXISTING SURFACE ELEVATION AND WHICH DOES NOT IMPEDE DRAINAGE. IF THE EXISTING PAVEMENT EDGE IS IN GOOD CONDITION FOLLOWING CONSTRUCTION IF THE NEW CONCRETE, THEN THE CONTRACTOR MAY CONFORM TO THE EXISTING PAVEMENT EDGE IN LIEU OF GRINDING AND OVERLAYING THE ASPHALT
10. CONTRACTOR IS RESPONSIBLE FOR LOCATING EXISTING UTILITIES AND SHALL CONTACT ARCHITECT IMMEDIATELY IN THE EVENT OF A CONFLICT WITH THE PROPOSED UTILITY LOCATION.
11. NEW CONCRETE WALK - SEE SPECIFICATION AND DETAILS FOR SECTION, WALKWAY TO HAVE CROSS SLOPE NOT EXCEEDING 2% AND 5% SLOPE IN DIRECTION OF WALK
12. PAINT CURB RED AND ANNOTATE WITH 3-INCH TALL WHITE LETTERS WHICH READ "NO PARKING"
13. EXISTING SIDEWALK AND STAIRS TO REMAIN
14. NEW CURB CUT AND DRIVEWAY APPROACH: THE CONSTRUCTION OF THE NEW DRIVEWAY AND CURB & GUTTER WILL REQUIRE A MINIMUM OF 2-FT WIDE SLOT PAVING BEYOND THE GUTTER LINE IN ORDER TO ALLOW CONCRETE FORMING AND PROPER COMPACTION OF SUBGRADE AND ROAD BASE PRIOR TO AC PAVEMENT RESTORATION.
15. BOLLARD (8/A5.1)
16. FURNISH AND INSTALL A SIGN ON FENCE THAT THE PARKING LOT IS FOR PRIVATE PARKING AND CARS PARKING WITHOUT PERMISSION ARE SUBJECT TO BEING TOWED AT CAR OWNER'S SOLE EXPENSE.
17. REMOVABLE 4"D BOLLARD

REVISION	
	1
	2

LICENSED ARCHITECT MARTIN OKAMOTO No. C21407 EXP. 11/30/2023 STATE OF CALIFORNIA

MARTINEZ + OKAMOTO architects, inc.
14467 PARK AVE.
VICTORVILLE, CA 92392
FAX: (760) 241-7854
BUS: (760) 241-7858

M:OA architects

Montebello Plymouth Congregational Church
Parking Lot Expansion
144 S Greenwood Ave, Montebello, CA 90640

DATE:	02/13/2022
SCALE:	1" = 10'
DRAWN BY:	MOA West
JOB:	19-30
SHEET TITLE:	SITE PLAN
SHEET	A1.1

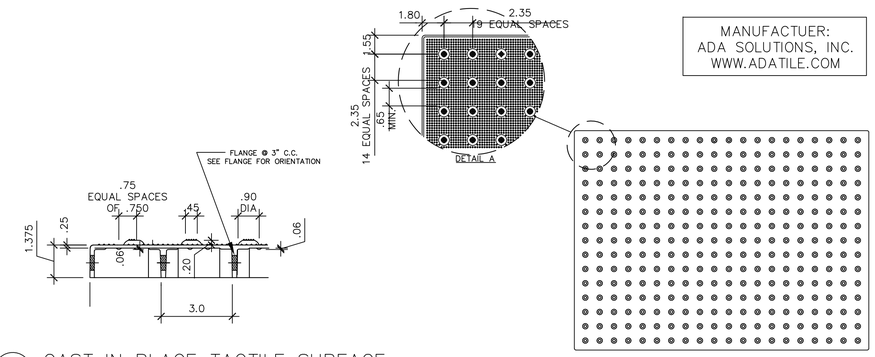

MANUFACTUER:
ADA SOLUTIONS, INC.
WWW.ADATILE.COM

10 CAST IN PLACE TACTILE SURFACE
SCALE: N.T.S.

NOTES:
1. PARKING SPACE SHALL BE MARKED WITH AN INTERNATIONAL SYMBOL OF ACCESSIBILITY COMPLYING WITH SECTION 11B-703.7.2.1 IN WHITE ON A BLUE BACK GROUND A MINIMUM 36 INCHES WIDE BY 36 INCHES HIGH (914 MM BY 914 MM). THE CENTERLINE OF THE EMBLEM SHALL BE A MAXIMUM OF 6 INCHES (152 MM) FROM THE CENTERLINE OF THE PARKING SPACE AND IT'S LOWER CONER AT, OR LOWER SIDE ALIGNED WITH, THE END OF THE PARKING SPACE LENGTH.
2. BLUE COLOR SHALL BE EQUAL TO COLOR NO. 15090 IN FEDERAL STANDARD 595B.
3. PROVIDE 2 COATS OF PAINT.

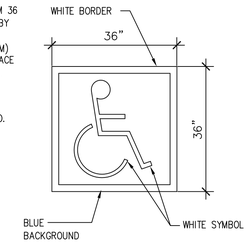

3 PARKING SPACE EMBLEM
SCALE: N.T.S.

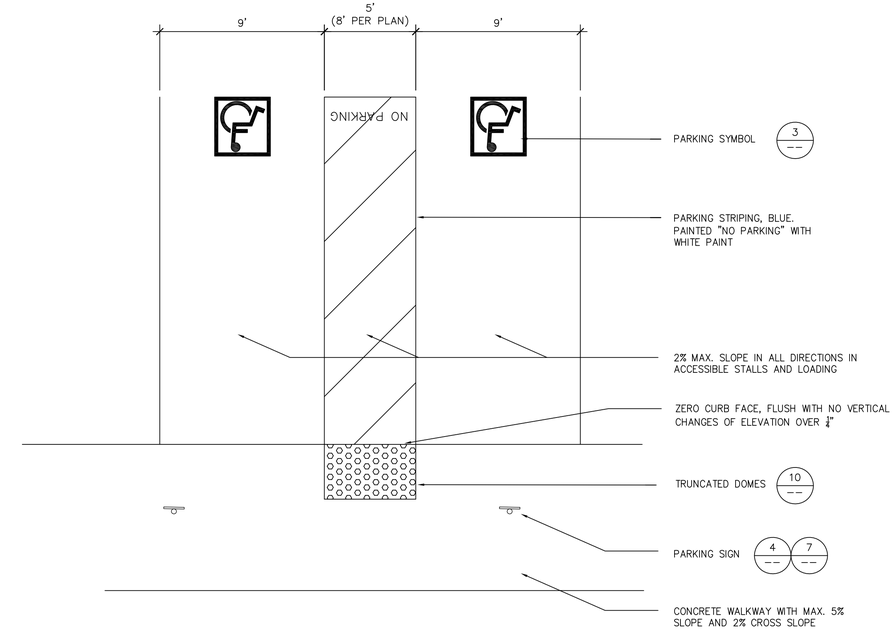

1 ACCESSIBLE PARKING STALLS
SCALE: NONE

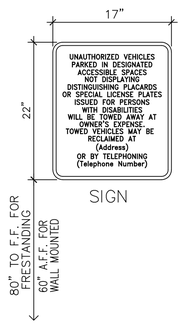

NOTES:
1. LOCATE WARNING SIGNAGE IMMEDIATELY ADJACENT TO AND VISIBLE FROM STALL OR SPACE. BLANK SPACES ON SIGN ARE TO BE
2. FILLED IN WITH APPROPRIATE INFORMATION AS A PERMANENT PART OF THE SIGN. SIZE OF LETTERING ON SIGNAGE IS A
3. MIN OF 1" HEIGHT. SIGN IS NOT TO BE LESS THAN 17" X 22" 4. IN SIZE.

11 DISABLED PARKING WARNING
SCALE: N.T.S.

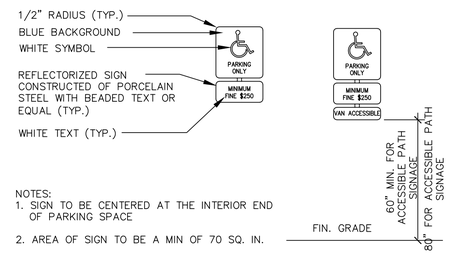

NOTES:
1. SIGN TO BE CENTERED AT THE INTERIOR END OF PARKING SPACE
2. AREA OF SIGN TO BE A MIN OF 70 SQ. IN.
3. DESIGNATE FOR "VAN ACCESSIBLE" WHERE APPROPRIATE
4. BLUE COLOR SHALL BE EQUAL TO COLOR NO. 15090 IN FEDERAL STANDARD 595B.

7 ACCESSIBLE PARKING SIGNS
SCALE: N.T.S.

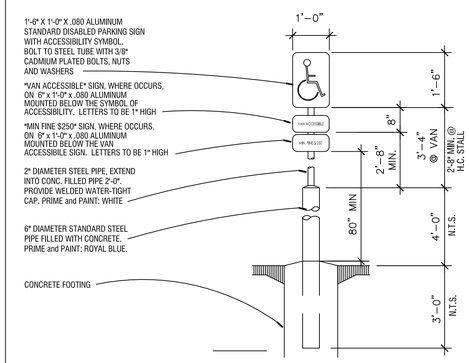

4 ACCESSIBLE PARKING SIGNS
SCALE: NONE

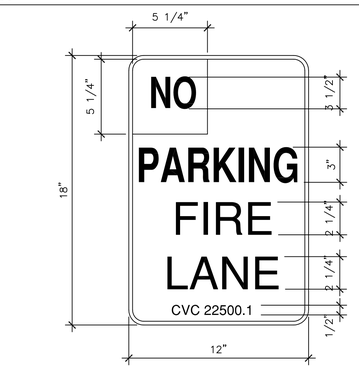

12 FIRE DEPARTMENT NOTES
SCALE: N.T.S.

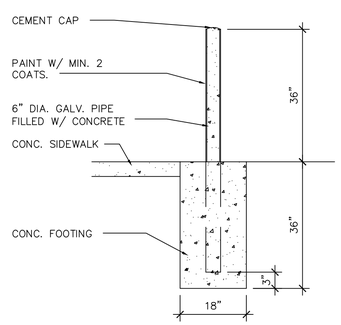

8 BOLLARD DETAIL
SCALE: N.T.S.

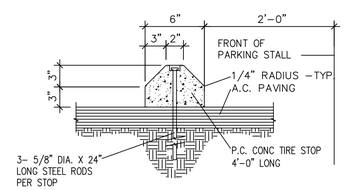

5 WHEEL STOP DETAIL.
SCALE: N.T.S.

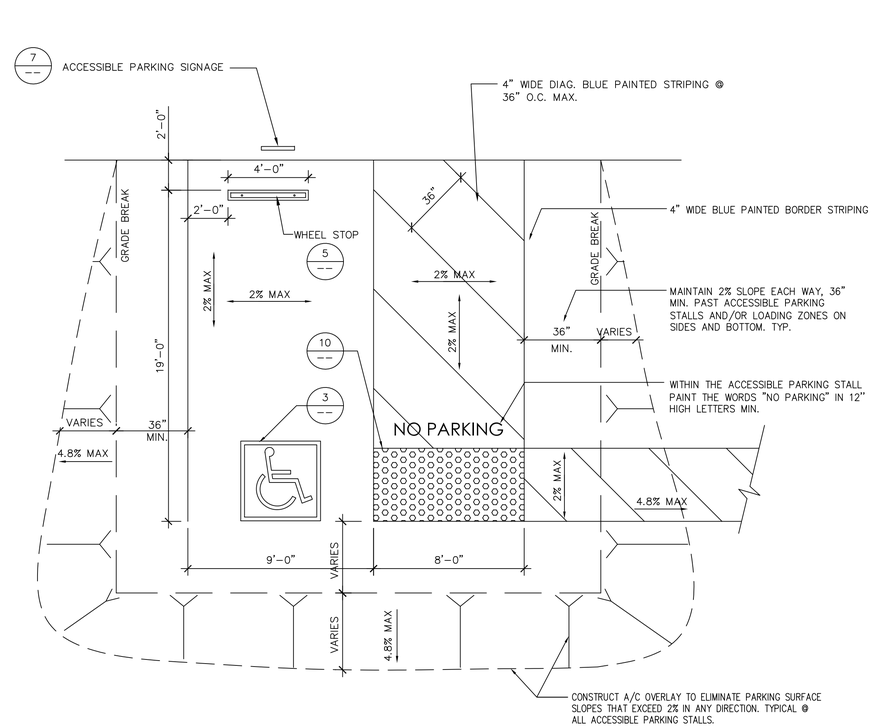

2 ACCESSIBLE PARKING STALLS
SCALE: NONE

13 NOT USED
SCALE:

9 NOT USED
SCALE:

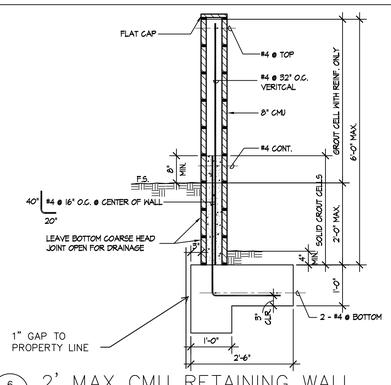

6 2' MAX CMU RETAINING WALL
SCALE: N.T.S.

REVISION	
	1
	2

MARTINEZ + OKAMOTO architects, inc.
14467 PARK AVE.
VICTORVILLE, CA 92392
FAX. (760) 241-7854
BUS. (760) 241-7858

M:OA architects

Montebello Plymouth Congregational Church
Parking Lot Expansion
144 S Greenwood Ave, Montebello, CA 90640

DATE:	02/13/2022
SCALE:	1/4" = 1'-0"
DRAWN BY:	MOA West
JOB:	19-30
SHEET TITLE:	DETAILS
SHEET	A5.1

12 NOT USED
SCALE: N.T.S.

8 NOT USED
SCALE: N.T.S.

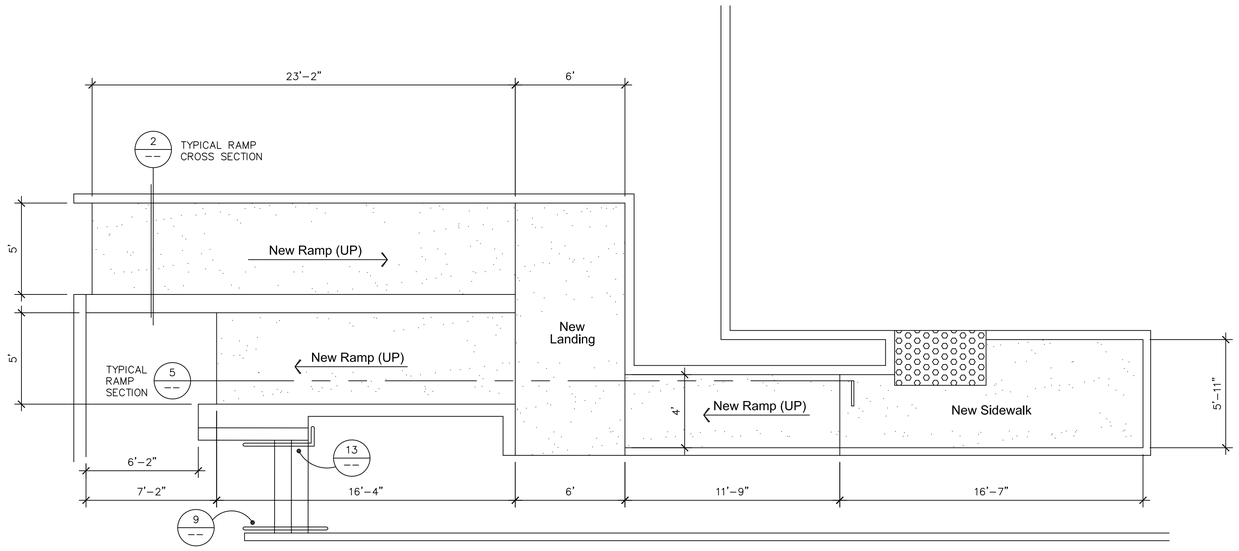

NOTES:
1. RAMPS: NOT TO EXCEED 8.33% SLOPE AND 2% CROSS SLOPE, MAX.
2. NEW SIDEWALK: NOT TO EXCEED 5% SLOPE WITH 2% CROSS SLOPE, MAX.

1 ENLARGED RAMP PLAN
SCALE: N.T.S.

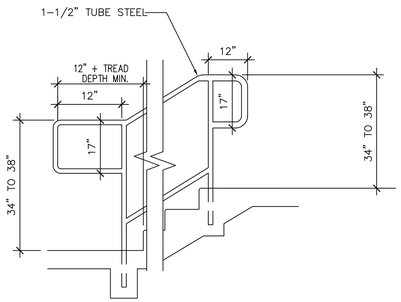

13 STAIR AND HANDRAIL DETAIL
SCALE: N.T.S.

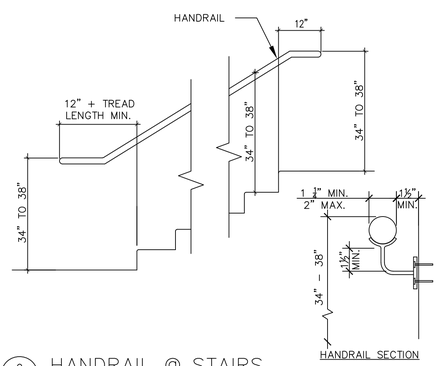

9 HANDRAIL @ STAIRS
SCALE: N.T.S.

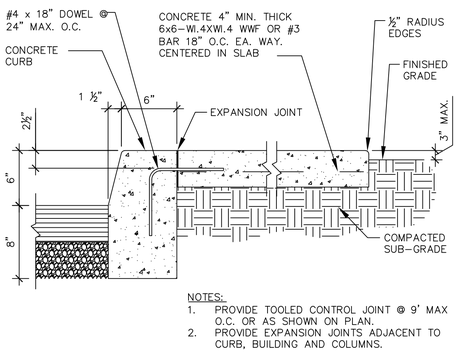

NOTES:
1. PROVIDE TOOLED CONTROL JOINT @ 9' MAX O.C. OR AS SHOWN ON PLAN.
2. PROVIDE EXPANSION JOINTS ADJACENT TO CURB, BUILDING AND COLUMNS.

14 CONCRETE CURB & WALK
SCALE: N.T.S.

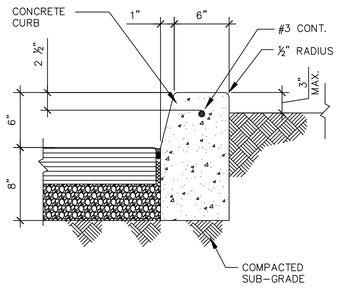

10 CONC. CURB @ PARKING & PLANTER
SCALE: N.T.S.

NOTES:
STEEL TUBING TO BE METALIZED W/ A POWDER COAT FINISH

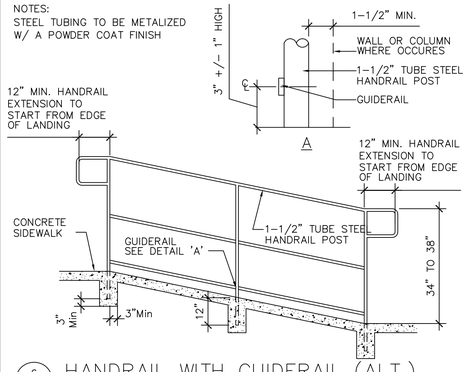

6 HANDRAIL WITH GUIDERAIL (ALT.)
SCALE: N.T.S.

NOTES:
STEEL TUBING TO BE METALIZED W/ A POWDER COAT FINISH

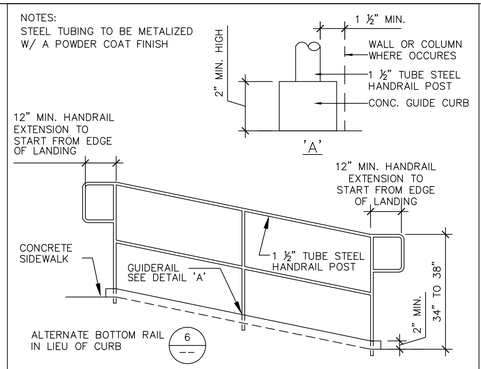

4 HANDRAIL WITH GUIDE CURB
SCALE: N.T.S.

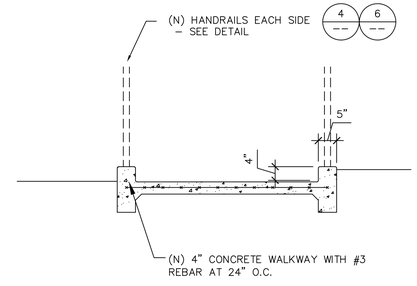

2 RAMP CURB
SCALE: N.T.S.

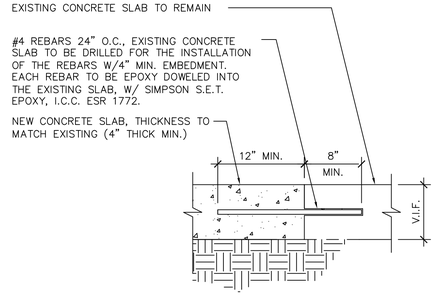

15 NEW TO (E) CONC. WALK TIE-IN
SCALE: NONE

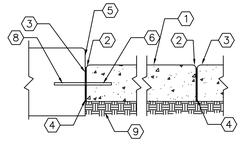

EXPANSION JOINTS

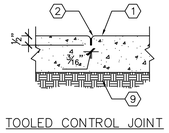

TOOLED CONTROL JOINT

LEGEND:
1. FINISH SURFACE OF CONCRETE PAVING
2. 1/4" RADIUS EDGE
3. WATERPROOF SEALANT (COLOR TO MATCH PAVING) DUST W/ SILICA SAND
4. 1/2" NON-BITUMINOUS FIBER EXPANSION JOINT FILLER
5. BUILDING, CURB, COLUMN, OR STRUCTURE
6. PLASTIC DOWEL SLEEVE
7. SAWCUT CONTROL JOINT MAX 3/16" WIDE (MIN. 1/8 ")
8. #4 BAR DOWEL @ 24" O.C.
9. BASE & COMPACTED SUBGRADE PER STRUCTURAL SOILS REPORT.

11 CONCRETE PAVING JOINTS
SCALE: N.T.S.

NOTE:
SLOPE OF RAMP SHALL BE BETWEEN 6.67% AND 8.33%. TRANSITIONS FROM RAMP TO WALKS, GUTTERS, OR STREETS SHALL BE FLUSH AND FREE OF ABRUPT CHANGES.

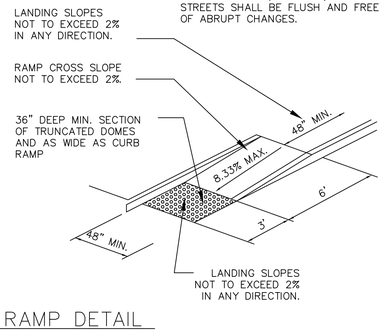

7 RAMP DETAIL
SCALE: N.T.S.

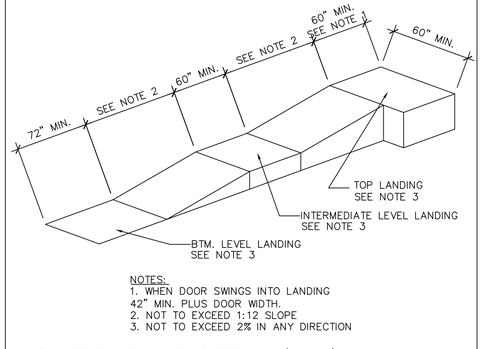

NOTES:
1. WHEN DOOR SWINGS INTO LANDING 42" MIN. PLUS DOOR WIDTH.
2. NOT TO EXCEED 1:12 SLOPE
3. NOT TO EXCEED 2% IN ANY DIRECTION

5 TYP. RAMP DETAIL (SIM.)
SCALE: N.T.S.

NOTE:
SLOPE OF RAMP SHALL BE BETWEEN 6.67% AND 8.33%. TRANSITIONS FROM RAMP TO WALKS, GUTTERS, OR STREETS SHALL BE FLUSH AND FREE OF ABRUPT CHANGES.

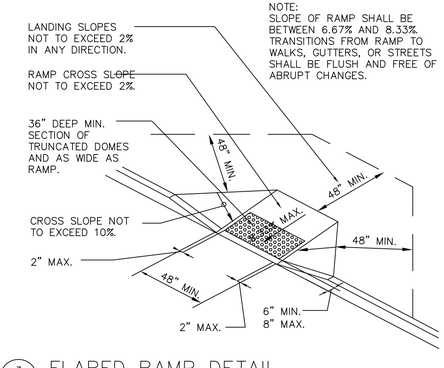

3 FLARED RAMP DETAIL
SCALE: NONE

REVISION	
	1
	2

LICENSED ARCHITECT MARTIN OKAMOTO No. C21407 EXP. 11/30/2023 STATE OF CALIFORNIA

MARTINEZ + OKAMOTO architects, inc.
14467 PARK AVE.
VICTORVILLE, CA 92392
FAX. (760) 241-7854
BUS. (760) 241-7858

M:O A architects

Montebello Plymouth Congregational Church
Parking Lot Expansion
144 S Greenwood Ave, Montebello, CA 90640

DATE:	02/13/2022
SCALE:	1/4" = 1'-0"
DRAWN BY:	MOA West
JOB:	19-30
SHEET TITLE:	DETAILS
SHEET	A5.2

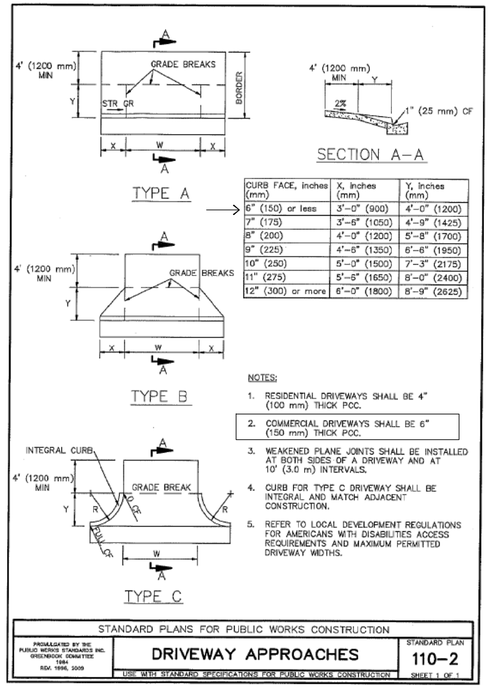

CURB FACE, inches (mm)	X, inches (mm)	Y, inches (mm)
6" (150) or less	3'-0" (900)	4'-0" (1200)
7" (175)	3'-6" (1050)	4'-9" (1425)
8" (200)	4'-0" (1200)	5'-8" (1700)
9" (225)	4'-6" (1350)	6'-6" (1950)
10" (250)	5'-0" (1500)	7'-3" (2175)
11" (275)	5'-6" (1650)	8'-0" (2400)
12" (300) or more	6'-0" (1800)	8'-9" (2625)

1 CITY STANDARD DETAILS
SCALE: N.T.S.

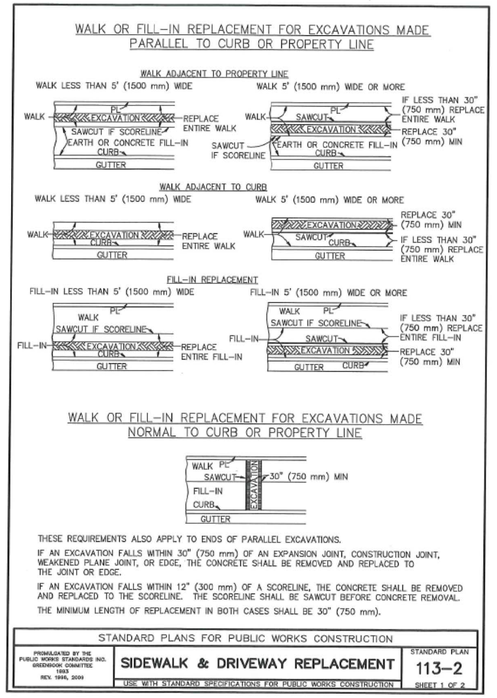

NOTES

1. CONCRETE WALK, FILL-IN AND DRIVEWAYS REMOVED IN CONNECTION WITH CONSTRUCTION SHALL BE REPLACED TO NEATLY SAWED EDGES. ALL CUTS SHALL BE PARALLEL TO OR PERPENDICULAR TO THE CURB; ON CURVES, THE CUT SHALL BE RADIAL TO THE CURB.
2. DRIVEWAY APRONS IN WHICH THE "W" DISTANCE IS LESS THAN 11' (3300 mm) SHALL BE REPLACED IN THEIR ENTIRETY IF CUT IN ANY AREA.
3. DRIVEWAY APRONS IN WHICH THE "W" DISTANCE IS 11' (3300 mm) OR MORE MAY BE CUT WITHIN THE "W" SECTION. THE MINIMUM REPLACEMENT SHALL BE 30" (750 mm) IN LENGTH. THE MINIMUM DISTANCE ALLOWED BETWEEN SUCH CUTS SHALL BE 14' (4200 mm).
4. DRIVEWAY APRONS IN WHICH THE "W" DISTANCE IS 11' (3300 mm) OR MORE MAY BE CUT IN THE "X" OR "R" SECTION. REPLACEMENT SHALL BE THE ENTIRE "X" OR "R" SECTION.
5. DRIVEWAY APRONS SHALL BE REPLACED FROM THE BACK OF THE CURB TO THE FRONT EDGE OF THE WALK, EXCEPT, WHERE WALK IS ADJACENT TO CURB, REPLACEMENT SHALL BE FROM BACK OF CURB TO BACK OF WALK.
6. WALK PORTIONS OF DRIVEWAYS SHALL BE REPLACED AS SHOWN ABOVE FOR EXCAVATIONS MADE PARALLEL OR NORMAL TO CURB.
7. REPLACEMENT OF THE "X" OR "R" SECTION SHALL MATCH EXISTING CONSTRUCTION.

STANDARD PLANS FOR PUBLIC WORKS CONSTRUCTION
SIDEWALK & DRIVEWAY REPLACEMENT
STANDARD PLAN 113-2
SHEET 2 OF 2

6 NOT USED
SCALE: N.T.S.

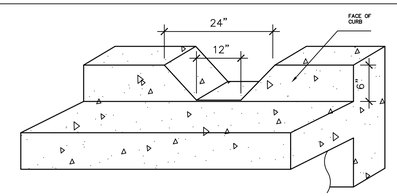

NOTE
PROVIDE WEAKENED PLANE JOINTS 1/8-INCH WIDE AND 1.5-INCH DEEP EVERY 15-FEET. PROVIDE EXPANSION JOINTS EVERY 60-FEET AND AT CHANGES IN DIRECTION. USE 1/4-INCH THICK PREMOLDED JOINT FILLER FULL THICKNESS OF CONCRETE.

LOCATE CURB DEPRESSIONS WHERE SHOWN ON THESE DRAWINGS AT INTERVALS NOT EXCEEDING 15-FEET ON CENTER.

4 CURB DEPRESSION DETAIL
SCALE: N.T.S.

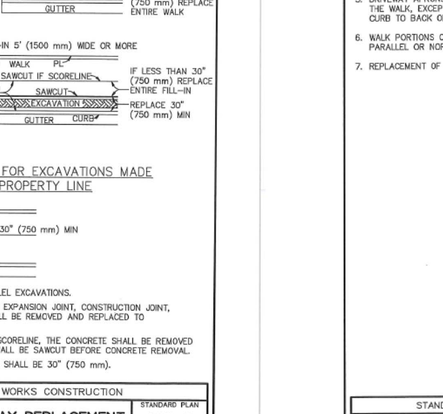

3 CURB & GUTTER DETAIL
SCALE: N.T.S.

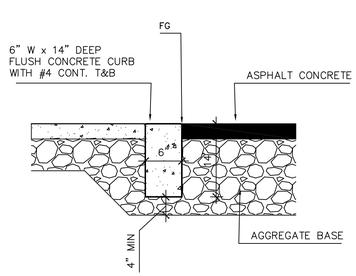

7 FLUSH CURB
SCALE: N.T.S.

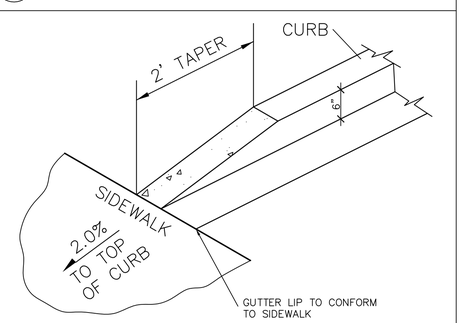

5 CURB TAPER DETAIL
SCALE: N.T.S.

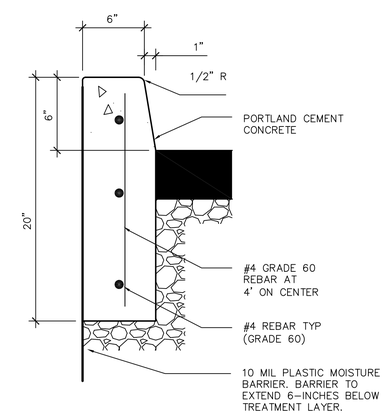

2 VERTICAL GUTTER DETAIL
SCALE: N.T.S.

REVISION

LICENSED ARCHITECT MARTIN OKAMOTO No. C21407 EXP. 11/30/2023 STATE OF CALIFORNIA

MARTINEZ + OKAMOTO architects, inc.
14467 PARK AVE.
VICTORVILLE, CA 92392
FAX: (760) 241-7654
BUS: (760) 241-7658

M:OA architects

Montebello Plymouth Congregational Church
Parking Lot Expansion
144 S Greenwood Ave, Montebello, CA 90640

DATE:	02/13/2022
SCALE:	1/4" = 1'-0"
DRAWN BY:	MOA West
JOB:	19-30
SHEET TITLE:	DETAILS
SHEET	A5.3

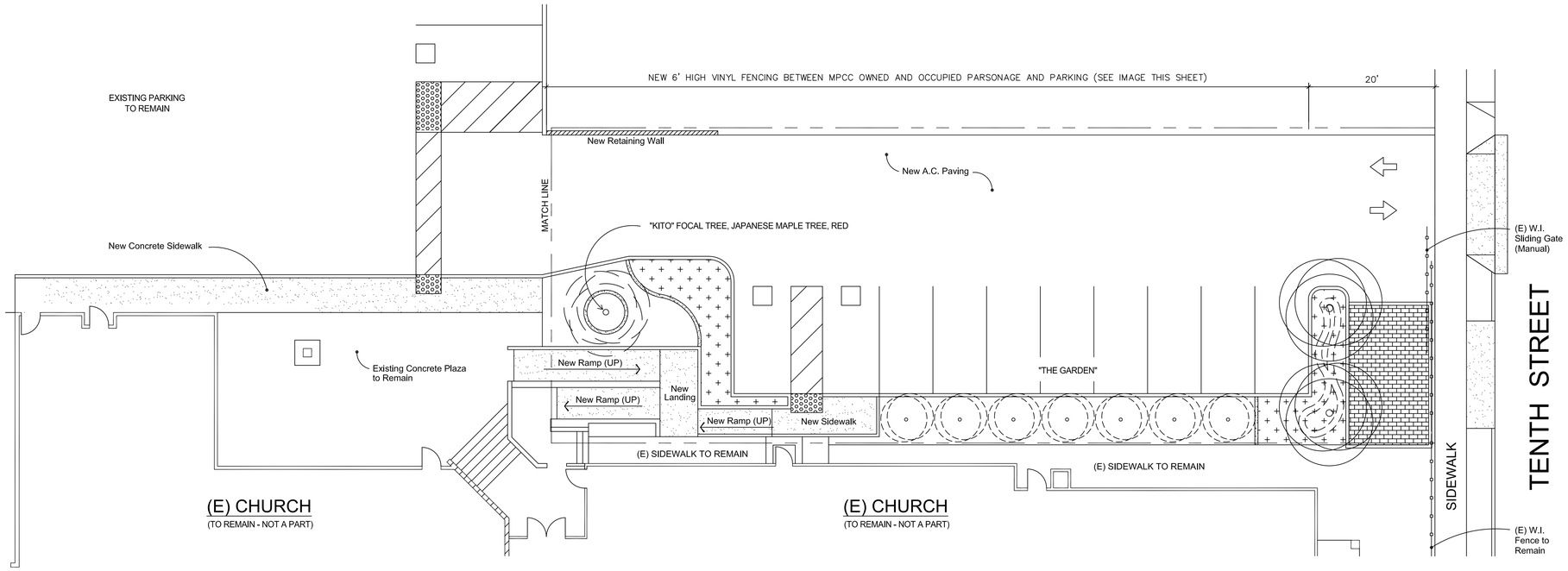

LANDSCAPING PLAN

N

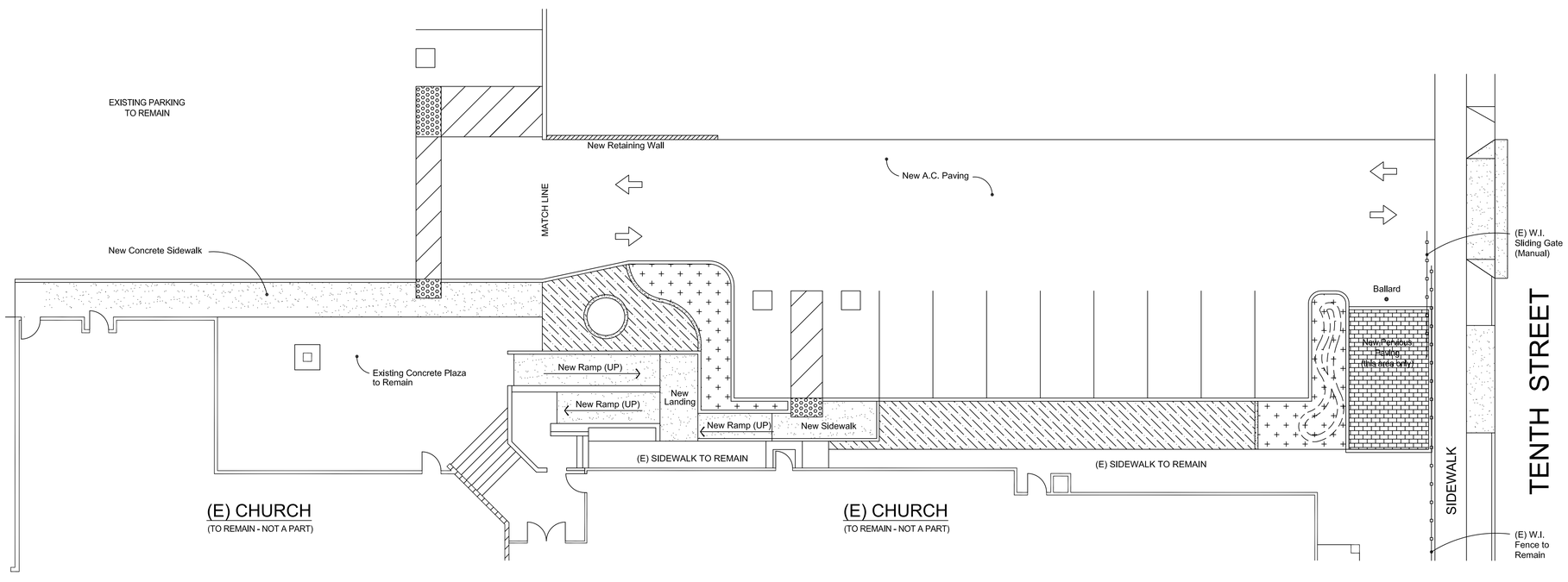

GROUNDCOVER PLAN

N

LEGEND

NEW JAPANESE MAPLE TREE, RED (ACER PALMATUM), The Japanese maple tree is a significant tree in nature, or "kito," which means calm, rest, or peace. The symbol of peace keeps people calm and avoids stress and accidents to create a safe and happy life

NEW JAPANESE MAPLE TREE, GREEN (ACER PALMATUM) ALTERNATE: ONE ORANGE TREE, LEGACY PLANTING FROM THE CHAVEZ FAMILY RESIDENCE

NEW DWARF CITRUS FRUIT TREES (VARIETY: MEYER LEMON, NAVEL ORANGE, LIME)

NEW 24" HIGH BERM

NEW SOCIETY GARLIC (TULBAGHIA VIOLACEA)

NEW POURED IN PLACE CONCRETE, MATCH ADJACENT SMOOTH FINISH

NEW CONCRETE PAVERS, STACK STONE 4" x 8" x 8"

NEW MEXICAN BEACH PEBBLE GREY DECORATIVE STONE OVER LANDSCAPE FABRIC AND HEAVY-DUTY PLASTIC TREE TRUNK EDGING AT EACH TREE, BLACK

FENCE

NEW 6' HIGH VINYL FENCE WITH LATTICE TOP BETWEEN NEW PARKING LOT AND CHURCH-OWNED AND OCCUPIED PARSONAGE

REVISION	
	1
	2

LICENSED ARCHITECT
JAMES T. OKAMOTO
No. C21407
EXP. 11/30/2023
STATE OF CALIFORNIA

MARTINEZ + OKAMOTO
architects, inc.
14467 PARK AVE.
VICTORVILLE, CA 92392
FAX: (760) 241-7854
BUS.: (760) 241-7858

M:OA architects

Montebello Plymouth Congregational Church

Parking Lot Expansion
144 S Greenwood Ave, Montebello, CA 90640

DATE:	02/13/2022
SCALE:	1" = 10'
DRAWN BY:	MOA West
JOB:	19-30
SHEET TITLE:	LANDSCAPING
SHEET	L1.1

Notice of CEQA Exemption

To:	**From:**
County of Los Angeles Registrar-Recorder/County Clerk 12400 Imperial Highway Norwalk, CA 90650	City of Montebello Planning & Community Development Department 1600 W. Beverly Blvd. Montebello, CA 90640

Lead Agency: City of Montebello Planning and Community Development Department
Project Title: Modification to Conditional Use Permit
Project Location: 141 S. 10th Street and 149 S. 10th Street
Case Number(s): PC-2023-0014-CUP-M1 & ENV No. 17-23-CE

Description of Nature, Purpose, and Beneficiaries of Project: The Applicant, on behalf of Montebello Plymouth Congregational Church, seeks approval of a modification to an existing Conditional Use Permit to establish a surface parking lot to an existing vacant lot providing supplemental parking for the church, establish ingress/egress from the church to the public right-of-way, and construct a driveway to access the new surface parking lot. The Applicant also requests other minor improvements such as replacing non-conforming accessible parking and ramps on the subject property located at located at 141 S. 10th Street (vacant lot) and 149 S. 10th Street (church lot) ("Project Site").

Name of the Public Agency Approving the Project: City of Montebello
Name of Person or Agency Carrying Out the Project: Wesley Okamoto, on behalf of Montebello Plymouth Congregational Church

Exempt Status (*check one*)
☐ Ministerial (Sec. 21080(b)(1); 15268(b)(3))
☐ Declared Emergency (Sec. 21080(b)(3); 15269(a)).
☐ Emergency Project (Sec. 21080(b)(4); 15269(b)(c)).
☒ Categorical Exemption: "Accessory Structures, Class 11, Section 15311
☐ Statutory Exemptions. State code number:

Justification for Project Exemption:

The project is Categorically Exempt per Section §15311 (a) (Accessory Structures), Class 11, of the CEQA Guidelines because Class 11 consists of the construction or placement of minor structures accessory to (appurtenant to) existing commercial, industrial, or institutional facilities, including but not limited to: on-premises signs; small parking lots; placement of seasonal or temporary use items such as lifeguard towers, mobile food units, portable restrooms, or similar items in generally the same locations from time to time in publicly owned parks, stadiums, or other facilities designed for public use. Examples of this exemption include but are not limited to appurtenant signs; landscaped public or private parking, if no more than four spaces.

Lead Agency Contact Person: Joseph Palombi, Director of Planning & Community Development
Area Code/Telephone/Extension: (323) 887-1478

If filed by applicant, attach certified document issued by the Planning and Community Development Department stating that the Department has found the project to be exempt.

Signature: _____ **Date:** _____ **Title:** _____

☒ Signed by Lead Agency ☐ Signed by Applicant

ITEM # 3

CITY OF MONTEBELLO
PLANNING COMMISSION AGENDA STAFF REPORT

TO: Members of the Planning Commission

FROM: Joseph Palombi, Planning & Community Development Director

BY: Daniel Ruiz, Assistant Planner

SUBJECT: **Conditional Use Permit ("CUP") Case No. PC-2023-0003-CUP to demolish an existing car wash located at 113 N. Garfield Avenue ("Project Site") and construct a new two-story express car wash and car polisher at the Project Site.**

DATE: January 16, 2024

RECOMMENDATION(S):

It is recommended that the Planning Commission conduct a public hearing and take the following action:

1. ADOPT Resolution No. 23-23 approving the demolition of the existing carwash and allow the construction of a new two-story carwash with conditions for the property located at 113 N. Garfield Avenue and make related findings that the proposed project is consistent with the Montebello General Plan; and
2. DETERMINE AND FIND that the project (ENV No. 2-23-CE) is categorically exempt from the California Environmental Quality Act (CEQA) pursuant to CEQA Guidelines Section 15332 – In-fill Development Projects.

FISCAL IMPACT:

None.

BACKGROUND:

On May 4, 2023, Michael Pauls Associates, the representative for 113 N. Garfield LLC (the "Applicant"), filed an application for a Conditional Use Permit (Case No. PC-2023-0003-CUP) to demolish the existing carwash at the Project Site and construct a new two-story carwash and car polisher.

On May 11, 2023, staff issued a deemed complete letter to the Applicant.

PROJECT /APPLICANT INFORMATION

Project Location: 113 N. Garfield Avenue
Project Applicant: 113 N. Garfield LLC
Property Owner: Dikran Harutiunian
General Plan Designation: General Commercial
Zoning: C-2 (General Commercial)
Existing Use on Property: Commercial (Car Wash)

PROJECT SITE

The surrounding zoning and land uses are listed as follows:

Direction	Zone	Land Use
North	C-2	General Commercial
South	C-2	General Commercial
East	C-2	General Commercial
West	C-2, Unincorporated LA County	General Commercial

PROJECT DESCRIPTION

The Applicant seeks approval to demolish the existing car wash located at 113 N. Garfield Avenue and construct a new two-story express car wash and car polisher. The existing car wash located at the Project Site was originally approved under CUP 10-70 on June 1st, 1970 (Planning Commission Resolution PC-42-70). CUP 10-70 was approved "to construct and operate a retail service station and automatic car wash" at the Project Site. Subsequently, a modification to the CUP (CUP 10-70, Modification 1-88) was approved by the Planning Commission on December 5, 1988, to legalize modifications that were made to the car wash business without prior approval. If this CUP request is approved, the previous CUP entitlement for the project site would become null and void and be replaced by the CUP currently proposed by the Applicant.

Based on records maintained by the City, the existing car wash at the Project Site consists of approximately 9,404 square feet of building area. The owner of the car wash is proposing to demolish all structures on the site and replace those structures with a new two-level water saving, environmentally friendly car wash and car polisher. The technology utilized by the new car wash will recycle over 60 percent of the wash water and will also allow for harmful contaminants such as oils or road grit and other pollutants to be disposed of in an environmentally appropriate manner.

The Project Site consists of two (2) parcels (Los Angeles County Assessor's Parcel Nos.

6343-014-031 and 6343-014-030) which would be tied administratively under the City's process for "lot ties" if this project is approved. The first floor of the proposed carwash will provide the following amenities:

- A carwash tunnel
- A polish tunnel
- An equipment room
- A trash enclosure
- A breakroom; and
- An office space totaling 7,329 square feet.

Additionally, a total of six (6) employee parking spaces including one (1) Americans with Disability Act (ADA) parking space will be placed on the first floor.

The proposed second floor consists of the following amenities:

- 20 vacuum positions
- A vacuum equipment room
- An electrical room
- A storage room
- A restroom; and
- An office totaling 5,159 square feet.

Combined, the first and second floor of the proposed two-story carwash building will total 12,488 square feet with the maximum height of the structure reaching 27'- 8".

The proposed hours of operation for the car wash and car polisher will be 7:00 am to 8:00 pm seven days per week. Additionally, the business owner prioritizes hiring employees from the local community and intends to hire 20 employees to operate the upgraded car wash and car polisher.

Per the Montebello Municipal Code (MMC) Section 17.52.050, outdoor uses require parking consistent with whichever is greater between the two following scenarios:

1) 1 parking space for each 2 employees on the largest working shift; or
2) 1 parking space per 1,000 square feet used for open display or sales plus, if the area exceeds 10,000 square feet, then 1 parking space is required per 5,000 square feet in excess of the first 10,000 square feet.

Based on the largest working shift of six (6) employees and on the lack of open display or sales areas proposed for the business, the proposed project requires a total of three (3) parking spaces. The required parking is met through the six (6) employee parking spaces including one (1) ADA parking space, as well as the twenty (20) vacuum positions including one (1) ADA vacuum stall. Additionally, a total of four (4) bicycle parking spaces are included in the proposal. Combined, a total of twenty-six (26) parking spaces including four (4) bicycle parking spaces will be provided for the project, which exceeds the required number of parking spaces.

Regarding the other development standards found within Chapter 17.22 (Commercial Zones Generally) of the MMC, the project proposal is consistent with the requirements for minimum lot size, maximum building height, maximum lot coverage, maximum floor area ratio, setbacks, as well as all other requirements of the MMC as shown in the table below.

C-2 Commercial Development Standards		
	MMC Requirement	Proposed
Minimum Lot Area	2,500 square feet	33,000 square feet
Minimum Lot Width	25 feet	130+ feet
Minimum Lot Depth	100 feet	220+ feet
Maximum Building Height	35 ft. where common lot line with R-1 (25 ft. for any portion of building within 15 ft. of R-1 property)	27 feet, 8 inches
Maximum Floor Area Ratio	3:1 ratio or 99,000 square feet allowed (3 x 33,000)	12,488 square feet (.38 FAR)
Maximum Lot Coverage	Unlimited except for required yard areas	24.42 percent (8,060/33,000)
Minimum Front Setback	5 feet; 0 feet with a decorative facade. 10 feet if abutting an R-zone. 20 feet in C-R if side abuts an R-zone.	80 feet provided
Minimum Side Setback	5 feet (15 feet if abutting R-zone); or 0 feet if no windows or doors (and decorative if abutting an R-zone). 5 feet minimum in first 20 feet back from the street if abutting an R-zone and has a decorative facade.	0 feet (no windows or doors)
Minimum Side Facing Street Setback	5 feet; or 0 feet if decorative facade;	0 feet (decorative façade provided)

	10 feet if C-R or if reverse corner lot abutting R-zone.	
Minimum Rear Setback	5 feet (15 feet if abutting R-zone); or 0 feet if no windows or doors (and decorative if abutting R-zone). 5 feet minimum in first 20 feet back from street if a reverse corner lot abutting an R-zone and has a decorative facade.	0 feet (no windows or doors provided)
Number of Parking Spaces	1 per 1,000 sq. ft. used for open display or sales—if area exceeds 10,000 sq. ft., then 1 space per 5,000 sq. ft. in excess of first 10,000; or 1 for each 2 employees on the largest working shift, whichever is greater.	N/A 6 parking spots (1 ADA) 4 bicycle parking provided 20 vacuum positions (1 ADA)*

* Note: 6 total employees during largest working shift; 3 parking spots required.

GENERAL PLAN LAND USE ELEMENT

The General Plan Land Use Element designation for the Project Site is the City's General Commercial land use designation. The following General Plan Land Use Element goals and policies are applicable to the project proposal:

General Plan Land Use Element Goal #1 is "to formulate a plan which is responsive to the needs of the community and which permits the orderly arrangement of land uses, permitting sufficient areas for reasonable development."

General Plan Land Use Element Commercial Policy #1 states that "Commercial development in the City should be sited in appropriate locations according to need."

General Plan Land Use Element Commercial Policy #2 states that the "City should contain a variety of commercial development, including regional and community shopping facilities, local neighborhood convenience centers, highway oriented development and professional office type areas."

General Plan Land Use Element Commercial Policy #5 states that the "City should contain ample commercial facilities to meet the needs of its residents as well as provide taxable revenues to the City."

The proposed project conforms to the City of Montebello General Plan Land Use Element Goal #1 and Commercial Policy #1 related to commercial developments being responsive to the needs of the community and to commercial developments being situated in appropriate locations according to need. The existing car wash at the current Project Site has been established for over 50 years, showcasing the need for the services provided by the business, and demonstrating the compatibility of the different uses in the vicinity of the Project Site. The fact that the car wash is still in operation over 50 years later demonstrates the success of the car wash in meeting the needs of the surrounding community. By demolishing and upgrading the car wash at the Project Site, the business owner will be able to improve the quality of the services offered to community residents and clientele. Additionally, General Plan Land Use Element Commercial Policy #2 and #5 relate to the City containing a variety of commercial facilities as well as to providing taxable revenues to the City. The car wash proposal will assist in meeting the needs of residents seeking a unique car wash experience and will provide additional taxable revenues to the City as well.

CONDITIONAL USE PERMIT

Pursuant to Chapter 17.70 (Conditional Use Permits) and Appendix A of the MMC, the approval of a CUP is required for carwashes proposed in the C-2 (General Commercial) zone. Section 17.70.010 of the MMC specifies that the purpose of conditional use permits is to "allow proper integration of uses into the community which may only be suitable in specific locations, or only if such uses are designed and constructed in a particular manner on the site, and under certain conditions."

Pursuant to Section 17.70.070 of the MMC, before any CUP shall be granted, the following findings must be made:

A. The site for the proposed use is adequate in size and shape;

The subject site is located within the C-2 (General Commercial) Zone which allows for uses with higher traffic and longer hours such as retail uses, medical and professional offices, general offices, as well as service and retail oriented automotive uses. An express carwash and polisher at this location is an unrepresented use in the area which will further the integrity and character of the C-2 zone. The subject site is physically suitable for the type of land use proposed on the subject property given that it is currently developed with a car wash. The subject site is adequate in size and shape to accommodate the development features of the proposed Project and is a proper location for the Project. The subject site(s) are rectangular-shaped commercial lots consisting of approximately 32,807 square feet and the project site is presently developed with a one-story automatic carwash established in 1971. The subject site is sufficient in size to accommodate the proposed 2 story express carwash / polisher development. The proposed project meets all the development standards of the City's Zoning Code for commercial zones including the requirements for minimum lot size, maximum building height, minimum setbacks, minimum parking requirements, and all other commercial development standards.

B. The site has sufficient access to streets and highways, and is adequate in width and pavement type to carry the quantity and quality of traffic generated by the proposed use;

The site will continue to have direct vehicular access from Whittier Boulevard, a major arterial per the Circulation Element of the City of Montebello's General Plan. The streets and highways are adequate in width and pavement to carry the quantity of traffic generated by the proposed environmentally friendly express carwash with a polisher. Additionally, the site plan proposed for the project incorporates the suggestions of the City's Traffic Engineer to ensure that the development does not have any adverse impacts on local traffic conditions.

C. How the proposed use will not have an adverse effect upon adjacent or abutting properties;

The land use classification of the site is commercial, which is consistent and compatible with the current zoning designation of C-2 (General Commercial). The subject site has been developed with a carwash since 1971. The use is compatible with surrounding development and the community because it will continue to provide a much-needed service and convenience to the community in an environmentally friendly manner. The use is compatible with existing and future land uses within the zone and the general area in which the proposed use is to be located. The granting of this conditional use will not adversely affect the adjacent uses, nor will it be detrimental to the public health, safety, or welfare. The upgrade of an existing automatic carwash to a new environmentally friendly, cutting-edge express carwash is compatible with the uses surrounding the subject site.

The surrounding uses include a restaurant to the north, which is zoned C-2; a coffee shop to the south, across Whittier Blvd., which is zoned C-2; a commercial shopping center to the east, across Garfield Ave., which is zoned C-2; a dry cleaning service which is zoned C-2 and residential properties across an alleyway located within Los Angeles County Unincorporated boundaries with an R-2 zoning designation.

D. How the proposed use will meet the general purpose and intent of the Zoning Code and how it will be consistent with the General Plan;

The proposed express carwash is consistent with the City's General Plan and Zoning Code. The General Plan Land Use classification of the site is General Commercial, which is consistent and compatible with the current zoning designation of C-2 (General Commercial). Carwashes are permitted conditionally in the C-2 zone.

The General Plan promotes services throughout the City in locations that are convenient to the public and which do not impact nearby properties. The creation of new businesses, services and employment opportunities for Montebello residents is an important goal in the community which can be assisted through the establishment of the proposed two-story car wash development. The development is compatible with the surrounding commercially zoned properties and having the project be reviewed in accordance with today's zoning, building, fire, and other relevant codes will allow the project site to be more consistent and in harmony with the surrounding community.

Additionally, the proposed use is consistent with General Plan Land Use Element Goal

1, as well as with General Plan Land Use Element Commercial Policies 1, 2, and 5. These goals and policies relate to the project being responsive to the needs of the community, to the City permitting for the orderly arrangement of land uses, to the City situating commercial developments in appropriate locations according to need, to the City providing a variety of types of commercial development, as well as to commercial developments providing taxable revenue to the City. The proposed project conforms with the City of Montebello General Plan Land Use Element in that the proposed use is in a developed commercial area, is compatible with the surrounding commercial uses, and the proposed car wash will increase the taxable revenue provided to the City of Montebello.

ENVIRONMENTAL:

The Conditional Use Permit (Case No. PC-2023-0003-CUP) is considered a "project," per the California Environmental Quality Act (CEQA) definition of a "project." The project is Categorically Exempt per Section §15332 (In-fill Developments) and none of the exceptions found under CEQA Section §15300.2 apply. Class 32 consists of projects characterized as in-fill development meeting the following conditions:

(a) The project is consistent with the applicable general plan designation and all applicable general plan policies as well as with applicable zoning designation and regulations.
(b) The proposed development occurs within city limits on a project site of no more than five acres substantially surrounded by urban uses.
(c) The project site has no value as habitat for endangered, rare or threatened species.
(d) Approval of the project would not result in any significant effects relating to traffic, noise, air quality, or water quality.
(e) The site can be adequately served by all required utilities and public services.

ANALYSIS:

None.

SUMMARY:

REPORTS RECEIVED

On May 11, 2023, the application materials for Case Number PC-2023-0003-CUP were forwarded to the Building Division as well as the following departments: 1) Public Works Department; 2) Montebello Fire Department; 3) Recreation and Community Services; and 4) Montebello Police Department for review, comments, and conditions. The conditions of approval that were provided are included in "Attachment A."

PUBLIC NOTIFICATION

Pursuant to MMC Section 17.78 (Public Hearings, Notices, and Appeals), the following noticing was performed:

- On November 22, 2023, the Public Hearing Notice was published in the Daily Journal (Whittier Daily News); and

- On November 22, 2023, the Public Hearing Notice was mailed to all property owners within a 300-foot radius from the exterior boundaries of the project site.

ATTACHMENT(S)

1. Resolution No. 23-23 - Conditional Use Permit (PC-2023-0003-CUP)
2. CEQA Notice of Exemption
3. Public Hearing Notification
4. Project Plans
5. Project Renderings

CITY OF MONTEBELLO
PLANNING COMMISSION

RESOLUTION NO. 23-23

A RESOLUTION OF THE PLANNING COMMISSION OF THE CITY OF MONTEBELLO, CALIFORNIA, APPROVING CONDITIONAL USE PERMIT ("CASE NO. PC-2023-0003-CUP") WITH CONDITIONS TO DEMOLISH AN EXISTING CAR WASH LOCATED AT 113 N. GARFIELD AVENUE("PROJECT SITE") AND CONSTRUCT A NEW TWO-STORY EXPRESS CAR WASH AND CAR POLISHER AND DETERMINING THAT THE CONDITIONAL USE PERMIT IS CATEGORICALLY EXEMPT UNDER CEQA § 15332 (IN-FILL DEVELOPMENT PROJECTS) (ENV NO. 2-23-CE).

WHEREAS, the City of Montebello ("City") received an application from Michael Pauls Associates on behalf of 113 N. Garfield LLC ("Applicant") for a Conditional Use Permit ("CUP") (Case No. PC-2023-0003-CUP) to allow the demolition of an existing car wash and to allow the construction of a new two-story carwash ("Project") at 113 N. Garfield Avenue ("Project Site"); and

WHEREAS, the approval of a Conditional Use Permit for a carwash in the C-2 (General Commercial) zone is required per Montebello Municipal Code ("MMC") Appendix A (Index of Primary Uses); and

WHEREAS, pursuant to Section 21067 of the Public Resources Code, and Section 15367 of the State California Environmental Quality Act ("CEQA") Guidelines (Cal. Code Regs., tit. 14, § 15000 et seq.), the City of Montebello is the lead agency for the proposed Project; and

WHEREAS, the CUP (Case No. PC-2023-0003-CUP) is considered a "project," as per the CEQA definition of a "project"; and

WHEREAS, the project is Categorically Exempt per CEQA Section 15332, Class 32 (In-fill Development Projects); and

WHEREAS, a duly noticed public hearing has been held, at which the Planning Commission received and considered staff presentations, recommendations, public testimony, and all other substantial evidence presented at the public hearing and included in the record for this matter; and

WHEREAS, all other legal prerequisites to the adoption of this Resolution have occurred.

NOW THEREFORE, the Planning Commission of the City of Montebello hereby finds, declares, and resolves as follows:

SECTION 1. RECITALS. The foregoing recitals are true and correct and are hereby incorporated as substantive findings in this Resolution.

SECTION 2. FINDINGS.

A. Per MMC 17.70.070, before any CUP is granted, the following findings must be made:

1. That the site for the proposed use is adequate in size and shape;

The subject site is located within the C-2 (General Commercial) Zone which allows for uses with higher traffic and longer hours such as retail uses, medical and professional offices, general offices, as well as service and retail oriented automotive uses. An express carwash and polisher at this location is an unrepresented use in the area which will further the integrity and character of the C-2 zone. The subject site is physically suitable for the type of land use proposed on the subject property given that it is currently developed with a car wash. The subject site is adequate in size and shape to accommodate the development features of the proposed Project and is a proper location for the Project. The subject site(s) are rectangular-shaped commercial lots consisting of approximately 32,807 square feet and the project site is presently developed with a one-story automatic carwash established in 1971. The subject site is sufficient in size to accommodate the proposed 2 story express carwash / polisher development. The proposed project meets all the development standards of the City's Zoning Code for commercial zones including the requirements for minimum lot size, maximum building height, minimum setbacks, minimum parking requirements, and all other commercial development standards.

2. That the site has sufficient access to streets and highways, and is adequate in width and pavement type to carry the quantity and quality of traffic generated by the proposed use;

The site will continue to have direct vehicular access from Whittier Boulevard, a major arterial per the Circulation Element of the City of Montebello's General

Plan. The streets and highways are adequate in width and pavement to carry the quantity of traffic generated by the proposed environmentally friendly express carwash with a polisher. Additionally, the site plan proposed for the project incorporates the suggestions of the City's Traffic Engineer to ensure that the development does not have any adverse impacts on local traffic conditions.

3. *That the proposed use will not have an adverse effect upon adjacent or abutting properties;*

The land use classification of the site is commercial, which is consistent and compatible with the current zoning designation of C-2 (General Commercial). The subject site has been developed with a carwash since 1971. The use is compatible with surrounding development and the community because it will continue to provide a much-needed service and convenience to the community in an environmentally friendly manner. The use is compatible with existing and future land uses within the zone and the general area in which the proposed use is to be located. The granting of this conditional use will not adversely affect the adjacent uses, nor will it be detrimental to the public health, safety, or welfare. The upgrade of an existing automatic carwash to a new environmentally friendly, cutting-edge express carwash is compatible with the uses surrounding the subject site.

The surrounding uses include a restaurant to the north, which is zoned C-2; a coffee shop to the south, across Whittier Blvd., which is zoned C-2; a commercial shopping center to the east, across Garfield Ave., which is zoned C-2; a dry cleaning service which is zoned C-2 and residential properties across an alleyway located within Los Angeles County Unincorporated boundaries with an R-2 zoning designation.

4. *That the proposed use is consistent with the objectives of the community redevelopment project area in which the site is located. Put another way, the finding must be made that the proposed use will meet the general purpose and intent of the Zoning Code and will be consistent with the purpose and intent of the General Plan and any applicable specific plan.*

The proposed express carwash is consistent with the City's General Plan and Zoning Code. The General Plan Land Use classification of the site is General Commercial, which is consistent and compatible with the current zoning designation of C-2 (General Commercial). Carwashes are permitted conditionally in the C-2 zone.

The General Plan promotes services throughout the City in locations that are convenient to the public and which do not impact nearby properties. The creation of new businesses, services and employment opportunities for Montebello residents is an important goal in the community which can be assisted through the establishment of the proposed two-story car wash development. The development is compatible with the surrounding commercially zoned properties and having the project be reviewed in accordance with today's zoning, building, fire, and other relevant codes will allow the project site to be more consistent and in harmony with the surrounding community.

Additionally, the proposed use is consistent with General Plan Land Use Element Goal 1, as well as with General Plan Land Use Element Commercial Policies 1, 2, and 5. These goals and policies relate to the project being responsive to the needs of the community, to the City permitting for the orderly arrangement of land uses, to the City situating commercial developments in appropriate locations according to need, to the City providing a variety of types of commercial development, as well as to commercial developments providing taxable revenue to the City. The proposed project conforms with the City of Montebello General Plan Land Use Element in that the proposed use is in a developed commercial area, is compatible with the surrounding commercial uses, and the proposed car wash will increase the taxable revenue provided to the City of Montebello.

SECTION 3. CEQA. The Planning Commission hereby determines that, based on the whole of the administrative record, the Project (ENV No. 2-23-CE) is exempt from CEQA pursuant to CEQA Guidelines, Section 15332 (In-Fill Development Projects), Class 32 and there is no substantial evidence demonstrating that an exception to a categorical exemption pursuant to CEQA Guidelines, Section 15300.2 applies. Additionally, the Project meets all of the following conditions:

(a) The project is consistent with the applicable general plan designation and all applicable general plan policies as well as with applicable zoning designation and regulations.

(b) The proposed development occurs within city limits on a project site of no more than five acres substantially surrounded by urban uses.

(c) The project site has no value as habitat for endangered, rare or threatened species.

(d) Approval of the project would not result in any significant effects relating to traffic, noise, air quality, or water quality.

(e) The site can be adequately served by all required utilities and public services.

The proposed project meets all the conditions required to be classified as a Class 32 CEQA exemption. The project is consistent with the applicable general plan and zoning designations, policies, and regulations. The proposed development occurs within city limits on a site of approximately .76 acres surrounded by already developed commercial and residential uses. The proposed project has been verified to present no value as habitat for endangered, rare, or threatened species and significant effects relating to traffic, noise, air quality, or water quality are not anticipated. Additionally, the site can be adequately served by all required utilities and public services.

SECTION 4. APPROVALS. The Planning Commission hereby approves the CUP (Case No. PC-2023-0003-CUP) to allow the demolition of the car wash existing at the Project Site and to allow the establishment of a new two-story car wash subject to the conditions set forth in Section 5 of this Resolution.

SECTION 5. CONDITIONS. The Planning Commission finds that the foregoing conditions of approval are necessary and appropriate.

A. Standard Conditions

1. The Applicant shall defend, indemnify, and hold harmless the City, its elected and appointed officials, agents, officers, and employees from any claim, action, or proceeding brought against the City, its elected and appointed officials, agents, officers, or employees arising out of, or which are related to the Applicant's project or application (collectively referred to as "proceedings"). The indemnification shall include, but not be limited to, damages, fees and/or costs awarded against the City, if any, and cost of suit, attorney's fees, and other costs, liabilities, and expenses incurred or awarded in connection with the proceedings whether incurred by the Applicant, the City and/or the parties initiating or bringing such proceedings. This indemnity provision shall include the Applicant's obligation to indemnify the City for all the City's costs, fees, and damages that the City incurs in enforcing the indemnification provisions set forth herein. The City shall have the right to choose its own legal counsel to represent the City's interest in the proceedings.

2. The development of the subject site shall be consistent with all provisions of the MMC, Conditional Use Permit No. PC-2023-0003-CUP/ENV No. 2-23, and the specifications of the City's Planning Division ("Planning Division" or "Planning Department").

3. Within thirty (30) days of the Planning Division transmittal of the Acceptance Form, the Applicant shall sign and return a copy of the Acceptance Form, agreeing to the conditions of approval and acknowledging that failure to comply with such conditions shall constitute grounds for potential revocation of the permit approval. Failure to return the Acceptance Form within thirty (30) days shall constitute grounds for terminating the permit.

4. Any previous entitlements on the property shall no longer be in effect.

5. The Director of Planning & Community Development ("Director"), at any time, can call for a review of the approved conditions of approval at a duly noticed public hearing before the Planning Commission. These condition(s) may be modified, or new condition(s) added to reduce any impacts of the use. The Planning Commission may revoke the CUP (Case No. PC-2023-0003-CUP/ENV No. 2-23) if sufficient cause is given.

6. The Applicant or successor in interest shall meet the applicable code requirements and all other City department regulations.

7. Construction shall only occur between the hours of 7:00 a.m. and 8:00 p.m. Monday thru Friday, and 9:00 a.m. to 6:00 p.m. on Saturdays, Sundays, and legal holidays, except in the case of an emergency where such action is immediately required to prevent injuries to persons or damage to property, as determined by the Building Official.

8. In the event the Applicant violates or fails to comply with any conditions of approval of this permit, no further permits, licenses, approvals, or certificate of occupancy shall be issued until such violation(s) has been fully remedied.

9. The Applicant, Owner, Management and/or successor of the use shall bear full cost of all monitoring and inspection activities to be conducted by City staff or its designated consultant representative(s) as necessary to ensure compliance with the conditions of this Resolution.

10. Any change, expansion, intensification and/or modification to the proposed plans use, or mode of operations shall be subject to the review and approval by the Director who may take action or call for review by the Montebello Planning Commission ("Planning Commission") at a noticed public hearing.

11. This approval shall not supersede the approval of any other responsible agencies. The Applicant shall comply with all Federal, State and local laws.

12. The approval of the entitlement shall expire if the rights granted are not exercised within one (1) year from the CUP's effective date. Exercise of right shall mean issuance of a building permit to commence construction or similar activities demonstrating the intent to proceed with the project, as determined by the Director.

13. The approval of this CUP can be extended up to and not to exceed an additional two years with a written request by the property owner stating the reason the extension is necessary. The extension request is subject to the review and approval of the Director.

14. A copy of the approved Resolution shall be attached to the construction plans for any site improvement at the submittal of plans for plan check.

15. No signs shall be installed on the site until a sign permit has been approved by the Planning Division and the Building & Safety Division in conformance with the provisions set forth in the MMC.

16. A landscape and irrigation plan prepared by Licensed Architect shall be submitted during the plan check process and must be approved prior to the issuance of building permits.

17. Per MMC Section 8.29.060 (M), all commercial car wash systems must have installed operational recirculating water systems or must have secured a waiver of this requirement and/or extension of time for installation from the city.

18. The property owner shall have all on-site graffiti removed within 24 hours of its appearance.

19. The applicant shall ensure that the traffic flow leading into the car wash tunnel does not encroach on to Whittier Boulevard.

20. The business operator shall take the necessary steps to assure the orderly conduct of employees, patrons, and visitors on the premises.

21. The parking area shall be sufficiently lit and secured to discourage loitering and/or late-night activity.

22. The premises shall be kept clean, and the operator of the establishment shall ensure that no trash or litter originating from the site is deposited onto neighboring properties or the public right of way.

23. A security plan must be submitted by a certified, bonded, and licensed security company. The security plan must be reviewed and approved by the Police Chief or his designee before a Certificate of Occupancy is issued.

24. Access to security cameras must be granted upon request by the City representatives seeking access to the building.

25. The Planning Commission shall have the right to impose additional conditions for the protection of the public health, safety, and welfare.

B. <u>Building Division Conditions</u>

1. The development and utilization of the site shall comply with all the provisions of the current Building, Plumbing, Mechanical, Electrical, Energy, CALGreen, Fire Codes, City Ordinances, as well as additional requirements from the Montebello Building and Safety Division.

2. The second sheet of building plans is to list all conditions of approval and to include a copy of the Planning Decision letter. This information shall be incorporated into the plans prior to the first submittal for plan check.

3. Plans prepared in compliance with the code in effect shall be submitted to the Building Division for review prior permit issuance.

4. Fees shall be paid to the County of Los Angeles Sanitation District prior to issuance of the building permit.

5. The building shall be addressed as 113 N. Garfield Ave., and an application to assign address shall be filed with the City prior to plan check submittal.

6. In accordance with paragraph 5538(b) of the California Business and Professions Code, plans are to be prepared and stamped by a licensed architect.

7. Structural calculations prepared under the direction of an architect, civil engineer or structural engineer shall be provided.

8. South Coast Air Quality Management District must be contacted prior to any demolition or renovation. Call (909) 396-2000 for further information. Failure to comply with the provisions of Rule 1403 may result in a penalty of up to $25,000 per day.

9. A geotechnical and soils investigation report is required, the duties of the soils engineer of record, as indicated on the first sheet of the approved plans, shall include the following:
    a. Observation of cleared areas and benches prepared to receive fill;
    b. Observation of the removal of all unsuitable soils and other materials;
    c. The approval of soils to be used as fill material;
    d. Inspection of compaction and placement of fill;
    e. The testing of compacted fills; and
    f. The inspection of review of drainage devices.

10. The owner shall retain the soils engineer preparing the Preliminary Soils and/or Geotechnical Investigation accepted by the City for observation of all grading, site preparation, and compaction testing. Observation and testing shall not be performed by another soils and/or geotechnical engineer unless the subsequent soils and/or geotechnical engineer submits and has accepted by the Public Works Department, a new Preliminary Soils and/or Geotechnical Investigation.

11. A grading and drainage plan shall be approved by the Engineering Division prior to issuance of the building permit. The grading and drainage plan shall indicate how all storm drainage including contributory drainage from adjacent lots is carried to the public way or drainage structure approved to receive storm water.

12. Projects shall comply with the requirements of the NPDES (NATIONAL POLLUTION DISCHARGE ELIMINATION SYSTEM) prior to issuance of a Demolition, Grading & Building permit. These include requirements for sediment control, erosion control, and construction activities control to be implemented on the project site.

13. All State of California disability access regulations for accessibility shall be complied with.

14. The property shall be surveyed, and the boundaries shall be marked by a land surveyor licensed by the State of California.

15. Foundation inspection will not be made until the excavation has been surveyed and the setbacks determined to be in accordance with the approved plans by a land surveyor licensed by the State of California. THIS NOTE IS TO BE PLACED ON THE FOUNDATION PLAN IN A PROMINENT LOCATION.

16. Electrical plan check is required.

17. Mechanical plan check is required.

18. Plumbing plan check is required.

19. Plumbing fixtures shall be provided as required by Chapter 4 of the California Plumbing Code. Additional fixtures may be required if not in compliance.

20. Project shall comply with the CalGreen Non-Residential requirements.

21. No form work or other construction materials will be permitted to encroach into adjacent property without written approval of the affected property owner.

22. A demolition permit is required for any existing buildings which are to be demolished.

23. Vacuum shading structure is considered to be occupied space and constitutes as a “story” per Building Code definitions. The floor area of this shade structure shall be included in the second story floor area.

24. The use the shade structure for parking purposes shall consider it an open parking garage of S-2 Group Occupancy per Section 406.5 of the Building Code and shall be of Type I, II, and IV construction.

25. Fire-resistance rating requirements for exterior walls based on fire separation distance of 0 to 10 feet shall comply with Table 705.5 of the Building Code.

26. The maximum area of exterior wall openings and degree of open protection based on fire separation distance of 0 to 10 feet shall comply with Table 705.8 of the Building Code.

27. To qualify for Exception 2 under Section 11B-206.2.1, the operation of the carwash business shall be conducted in a manner that would receive all customers only by vehicular access to the facility.

28. The employee surface parking area is considered as a separate parking facility from that of the parking spaces on the 2nd floor parking deck/shade structure. It shall comply with accessible parking space requirement per Section 11B-208.2, independent from the other parking facility on site.

29. To be exempt from the elevator requirement per Section 11B-206.2.3, the services provided to all customers shall not require them to travel between floors or the services provided are identical for each floor.

30. All fire sprinkler hangers must be designed, and their location approved, by an engineer or an architect. Calculations must be provided indicating that the hangers are designed to carry the tributary weight of the water filled pipe plus

a 250-pound point load. A plan indicating this information must be stamped by the engineer or the architect and submitted for approval prior to issuance of the building permit.

31. A separate permit is required for fire sprinklers.

C. Fire Department Conditions

1. The development shall comply with all applicable provisions of the California Fire Code, referenced NFPA standards, and local ordinances.

2. A fire access plan must be provided based off requirements of 2019 Edition California Fire Code.

3. A fire hydrant plan with water flow report demonstrating the project meets requirements of 2019 Edition California Fire Code must be provided.

4. Additional requirements may be added during the plan check process.

D. Public Works - Engineering Conditions

1. The Applicant will abide by any additional conditions imposed by the Public Works Department and Engineering Division during the plan check process and will, upon request, provide the Public Works Department with any additional information or documentation required.

2. “Left turn only” signage must be provided to skew proposed exit-only driveway off the alley along and to ensure westbound egress only from the site.

3. The proposed northerly escape gate off the existing alley shall remain closed during business hours except for “emergency exit/unexpected exit request.”

4. Carwash service operation must be adjusted, on an as needed basis, to ensure patron’s vehicles do not queue up on Whittier Boulevard and do not interrupt existing transit stop operation.

5. ROW must be dedicated for a 20-feet alley width, if needed.

6. All existing driveways fronting the site must be replaced with new curb/gutter and sidewalk per city standards.

7. The applicant shall submit for a lot tie subject to the review and approval of the Department of Public Works and Engineering Division. The Lot Tie shall be finalized and recorded with the Los Angeles County Recorder’s Office to

hold the properties as one lot prior to the issuance of the Building Division permit.

PASSED AND ADOPTED this 16th day of January, 2024 by the Planning Commission.

Chair Cuevas:	( ) AYE	( ) NOE	( ) ABSENT	( ) ABSTAIN
Commissioner Lomeli:	( ) AYE	( ) NOE	( ) ABSENT	( ) ABSTAIN
Commissioner Medina:	( ) AYE	( ) NOE	( ) ABSENT	( ) ABSTAIN
Commissioner Morales:	( ) AYE	( ) NOE	( ) ABSENT	( ) ABSTAIN
Commissioner Valdez:	( ) AYE	( ) NOE	( ) ABSENT	( ) ABSTAIN

_____
Victor Cuevas, Chair

ATTEST:

_____
Joseph A. Palombi, Director
Planning & Community Development Department

Notice of CEQA Exemption

To:
County of Los Angeles
Registrar-Recorder/County Clerk
12400 Imperial Highway
Norwalk, CA 90650

From:
City of Montebello
Planning & Community Development Department
1600 W. Beverly Blvd.
Montebello, CA 90640

Lead Agency: City of Montebello Planning and Community Development Department
Project Title: 113 N. Garfield Avenue Car Wash
Project Location: 113 N. Garfield Avenue
Case Number(s): PC-2023-0003-CUP, ENV No. 2-23-CE

Description of Nature, Purpose, and Beneficiaries of Project: The project involves demolishing the existing car wash at 113 N. Garfield Avenue and replacing the car wash with a new two-story express car wash and car polisher on behalf of the property owner, 113 N. Garfield, LLC.

Name of the Public Agency Approving the Project: City of Montebello
Name of Person or Agency Carrying Out the Project: Michael Pauls Associates on behalf of the property owner, 113 N. Garfield, LLC

Exempt Status (*check one*)
☐ Ministerial (Sec. 21080(b)(1); 15268(b)(3))
☐ Declared Emergency (Sec. 21080(b)(3); 15269(a));
☐ Emergency Project (Sec. 21080(b)(4); 15269(b)(c));
☒ Categorical Exemption. State type and section number: Class 32- CEQA Section 15332 (In-fill Development Projects)
☐ Statutory Exemptions. State code number:

Justification for Project Exemption:
The Project is categorically exempt per §15332 - Class 32 (In-Fill Development Projects) of the CEQA Guidelines and none of the exceptions under § 15300.2 apply. CEQA Guidelines §15332 exempts projects which meet the following conditions:

(a) The project is consistent with the applicable general plan designation and all applicable general plan policies as well as with applicable zoning designation and regulations.

(b) The proposed development occurs within city limits on a project site of no more than five acres substantially surrounded by urban uses.

(c) The project site has no value as habitat for endangered, rare or threatened species.

(d) Approval of the project would not result in any significant effects relating to traffic, noise, air quality, or water quality.

(e) The site can be adequately served by all required utilities and public services

The proposed project meets all the conditions required to be classified as a Class 32 CEQA exemption. The project is consistent with the applicable general plan and zoning designations, policies, and regulations. The proposed development occurs within city limits on a site of approximately .76 acres surrounded by already developed commercial and residential uses. The proposed project has been verified to present no value as habitat for endangered, rare, or threatened species and significant effects relating to traffic, noise, air quality, or water quality are not anticipated. Additionally, the site can be adequately served by all required utilities and public services.

Lead Agency Contact Person: Joseph Palombi, Director of Planning & Community Development
Area Code/Telephone/Extension: (323) 887-1478
If filed by applicant, attach certified document issued by the Planning and Community Development Department stating that the Department has found the project to be exempt.

Signature: _____ **Date:** _____ **Title:** _____

☒ Signed by Lead Agency ☐ Signed by Applicant

City of Montebello

NOTICE OF PUBLIC HEARING
CITY OF MONTEBELLO PLANNING COMMISSION

Conditional Use Permit
Categorical Exemption (Section 15332 – Class 32 "In-Fill Development Projects")

Location: 113 N. Garfield Avenue, Montebello, CA 90640
Case No.: PC-2023-0003-CUP/ENV No. 2-23-CE
Applicant: 113 N. Garfield Avenue

Project Description: A Conditional Use Permit (CUP) request to demolish the existing carwash located at 113 N. Garfield Avenue ("Project Site") and to replace the carwash with a new two-story express carwash and car polisher. The first floor of the proposed carwash consists of a carwash tunnel, a polish tunnel, an equipment room, a trash enclosure, a breakroom, and an office space totaling 7,329 square feet. Additionally, a total of 6 employee parking spaces including 1 ADA space will be placed on the first floor. The proposed second floor consists of 20 vacuum positions, a vacuum equipment room, an electrical room, a storage room, a restroom, and an office totaling 5,159 square feet. Combined, the first and second floor of the proposed carwash building will total 12,488 square feet with the maximum height of the structure reaching 27'- 8".

Zone: C-2 (General Commercial)
General Plan Designation: Boulevard Commercial

Environmental: The proposal is considered a "Project" and is categorically exempt under California Environmental Quality Act (CEQA) Section 15332 – Class 32 (In-Fill Development Projects).

NOTICE IS HEREBY GIVEN that the City of Montebello ("City") Planning Commission ("Planning Commission") will hold a public hearing to consider the CUP applications described above. The meeting is scheduled to be held on:

Date: Tuesday, December 5, 2023
Time: 6:30 p.m.
Place: City Hall Council Chambers
1600 West Beverly Boulevard, Montebello, CA, 90640

For those interested in participating in-person during the Public Comment period(s) or public testimony period for Public Hearings of the Planning Commission, you may address the Planning Commission in person the day of the meeting. Speakers will be required to fill out a speaker card provided at the door and turn it into the Administrative Secretary prior to each Public Comment announcement period. Staff will number and call each speaker card in the order received.

The public may also submit emailed comments via the City's email address: pcpubliccomment@montebelloca.gov where the public can submit written public comments up until the day of the meeting, **Tuesday, December 5, 2023 between 7:30 a.m. – 6:00 p.m.** These comments will be read out loud and submitted for the record. Additional Information related to the Planning Commission meetings can be located on the City's webpage: https://www.montebelloca.gov/cms/One.aspx?portalId=58756&pageId=61848.

Written comments may also be mailed or delivered to the Planning Commission at the Planning Division office address identified below on or before the meeting date. If you challenge the matter in court, you may be limited to raising those issues you or someone else raised at the public hearing, or in written correspondence delivered to the City of Montebello at, or prior to, the public hearing.

For more information about the project and the related environmental documentation please contact:
Contact Person: Daniel Ruiz, Assistant Planner
Phone: 323.887.1200 Ext. 1484 / **Email:** druiz@montebelloca.gov
Address: City of Montebello, City Hall, Planning Division, 1600 W. Beverly Blvd, Montebello, CA 90640
City Website: www.montebelloca.gov
Date of Publication: November 22, 2023

DEMOLISH EXISTING CARWASH AND CONSTRUCT NEW EXPRESS CARWASH

ADDRESS:
113 N GARFIELD AVE, MONTEBELLO, CA 90640

PROJECT DATA

EXISTING USE
CARWASH

PROPOSED USE
CARWASH

LEGAL DESCRIPTION
LOTS 13, 14, 15, 57, 58, 59 OF TRACT 9752, IN THE CITY OF MONTEBELLO, COUNTY OF LOS ANGELES, STATE OF CALIFORNIA, AS PER MAP RECORDED IN BOOK 136 PAGES 36 AND 37 OF MAPS, AND THAT PORTION OF AN ALLEY, AS SHOWN ON A MAP OF TRACT 9752, RECORDED IN BOOK 136 PAGES 36 AND 37 OF MAPS, ON FILE IN THE OFFICE OF THE COUNTY RECORDER OF SAID COUNTY DESCRIBED AS FOLLOWS:
THAT PORTION LYING WESTERLY OF THE WESTERLY LINE OF GARFIELD AVENUE AND EASTERLY OF THE 30 FEET SOUTHERLY PROLONGATION OF THE WESTERLY LINE OF LOT 59 OF SAID TRACT 9752.

ASSESSORS PARCEL NO.
6343-014-031 & 6343-014-030

THOMAS BROTHERS MAP
PAGE 676 - GRID B1

ZONING
C2 - GENERAL COMMERCIAL

GENERAL PLAN

TYPE OF CONSTRUCTION
CARWASH BUILDING II-B

OCCUPANCY CLASS
CARWASH BUILDING B

FIRE SPRINKLERS
NONE

EXISTING BUILDING TO BE DEMOLISHED
3,025 SF
NOTE: DEMO ALL EXISTING IMPROVEMENT & FOUNDATION, CAP ALL EXISTING SEWER LATERAL.

PROJECT TEAM

PROJECT SPONSOR / OWNER
113 N. GARFIELD LLC
ATTN: RICHARD HARUTIUNIAN
213.840.2888
ARADINC@SBCGLOBAL.NET

ARCHITECT
GASOLINE RETAIL FACILITIES CONSULTING
ATTN: ANDREW PASZTERKO
213.359.4860
ANDY@GAZRETAIL.COM
2055 N ALVARADO ST, LOS ANGELES CA 90039

PLANNING CONSULTANT
MICHAEL PAULS ASSOCIATES
ATTN: MICHAEL PAULS
714.381.0881
MICHAEL@MICHAELPAULSASSOCIATES.COM

CIVIL / SURVEY
SPB ENGINEERING, INC.
ATTN: SAT PAL
714.931.0912
FIJI1961@GMAIL.COM
1391 WINDEMERE LN, TUSTIN CA 92780

DRAWING INDEX

ARCHITECTURAL

A0.1	COVER SHEET
A1.0	EXISTING SITE PLAN/ DEMO PLAN
A1.1	CONTEXT PLAN
A1.2	PROPOSED SITE PLAN
A1.3	2ND FLOOR PLAN/ ROOF PLAN
A1.4	SITE PLAN & 2ND FLOOR PLAN W/ LEGEND
A2.0	COLORED ELEVATIONS
A3.0	MATERIAL BOARD
A4.0	DETAILS

1 VICINITY MAP
NOT TO SCALE

SCOPE OF WORK

1. DEMOLISH ALL EXISTING IMPROVEMENT
2. CONSTRUCT NEW CARWASH CONSISTING OF CARWASH TUNNEL, EQUIPMENT ROOM, AND POLISH TUNNEL
3. INSTALL (20) VACUUMS
4. INSTALL (3) 1,500 GALLON IN-GROUND CLARIFIERS W/ INSPECTION WELL
5. INSTALL EXTERIOR LIGHTING
6. INSTALL LANDSCAPING

FLOOR AREA CALCULATION

1ST FLOOR AREA	7,329	SF
2ND FLOOR AREA	5,159	SF
GROSS FLOOR AREA	12,488	SF

AREA CALCULATION

LOT AREA	32,810	SF	0.753 ACRES
BUILDING COVERAGE AREA	8,060	SF	24.6% OFLOT
LANDSCAPED AREA	2,919	SF	8.9% OF LOT
PAVED AREA	21,831	SF	66.5 % OF LOT

TOTAL EMPLOYEE PER SHIFT
4

PARKING CACULATIONS

NO. OF PARKING PRV'D	6 (INCLUDING 1 ADA PARKING)
NO. OF BIKE PARKING PRV'D	4
VACUUM POSITIONS	20 (INCLUDING 1 ADA VACUUM STALL)

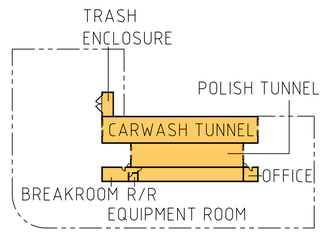

1ST FLOOR AREA

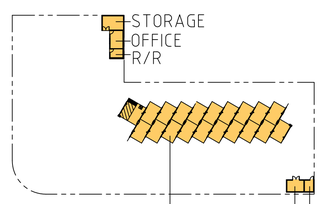

2ND FLOOR AREA

VACUUM SHADING STRUCTURE
VACUUM EQUIPMENT ROOM
ELEC ROOM

DOCUMENT PREPARED BY:
GASOLINE RETAIL FACILITIES CONSULTING
ATTN: ANDREW PASZTERKO - ARCHITECT
CALIFORNIA LIC. # C-12253
2055 NORTH ALVARADO STREET,
LOS ANGELES, CALIFORNIA 90039
ph: 323.665.0844, fax: 323.661.0723
andy@gazretail.com

OWNER:
113 N. GARFIELD LLC
ATTN:
RICHARD HARUTIUNIAN
213.840.2888
ARADINC@SBCGLOBAL.NET

PROJECT TITLE:
NEW CARWASH

ADDRESS: 113 N GARFIELD AVE, MONTEBELLO, CA 90640

LICENSED ARCHITECT
ANDREW E. PASZTERKO
Lic. No. C-12253
RENEWAL DATE:
MAY 31, 2025
STATE OF CALIFORNIA

Gasoline Retail Facilities Consulting

SHEET CONTENTS:
COVER SHEET

Date:	10-04-23
Scale:	AS SHOWN
Drawn:	RX
Job No.	

DATE LOG-REVISIONS

REV	DATE	DESCRIPTION

Sheet A0.1
of sheets

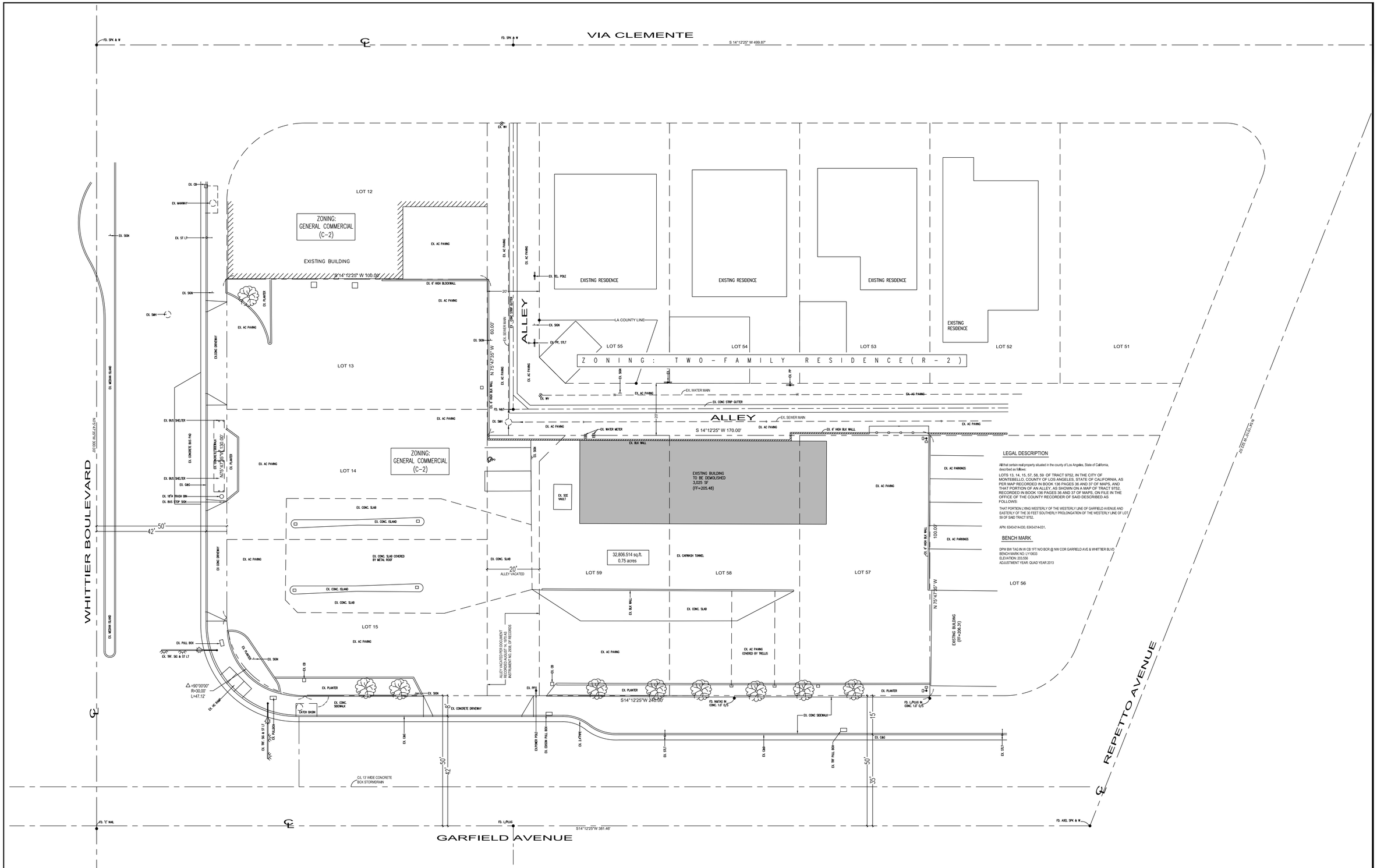

LEGAL DESCRIPTION

All that certain real property situated in the county of Los Angeles, State of California, described as follows:

LOTS 13, 14, 15, 57, 58, 59 OF TRACT 9752, IN THE CITY OF MONTEBELLO, COUNTY OF LOS ANGELES, STATE OF CALIFORNIA, AS PER MAP RECORDED IN BOOK 136 PAGES 36 AND 37 OF MAPS, AND THAT PORTION OF AN ALLEY, AS SHOWN ON A MAP OF TRACT 9752, RECORDED IN BOOK 136 PAGES 36 AND 37 OF MAPS, ON FILE IN THE OFFICE OF THE COUNTY RECORDER OF SAID DESCRIBED AS FOLLOWS:

THAT PORTION LYING WESTERLY OF THE WESTERLY LINE OF GARFIELD AVENUE AND EASTERLY OF THE 30 FEET SOUTHERLY PROLONGATION OF THE WESTERLY LINE OF LOT 59 OF SAID TRACT 9752.

APN: 6343-014-030, 6343-014-031.

BENCH MARK

DPW BW TAG IN W CB 1FT NO BCR @ NW COR GARFIELD AVE & WHITTIER BLVD
BENCH MARK NO: LY19033
ELEVATION: 203.556
ADJUSTMENT YEAR: QUAD YEAR 2013

1 EXISTING SITE PLAN/ DEMO PLAN
SCALE: 1/16"=1'-0"

NOTE
DEMO ALL EXISTING IMPROVEMENT & FOUNDATION,
CAP ALL EXISTING SEWER LATERAL.

DOCUMENT PREPARED BY:
GASOLINE RETAIL FACILITIES CONSULTING
ATTN: ANDREW PASZTERKO - ARCHITECT
CALIFORNIA LIC. # C-12253
2055 NORTH ALVARADO STREET,
LOS ANGELES, CALIFORNIA 90039
ph: 323.665.0844, fax: 323.661.0723
andy@gazretail.com

OWNER:
113 N. GARFIELD LLC
ATTN:
RICHARD HARUTIUNIAN
213.840.2888
ARADINC@SBCGLOBAL.NET

PROJECT TITLE:
NEW CARWASH
ADDRESS: 113 N GARFIELD AVE, MONTEBELLO, CA 90640

LICENSED ARCHITECT
ANDREW E. PASZTERKO
Lic. No.: C-12253
RENEWAL DATE
MAY 31, 2025
STATE OF CALIFORNIA

Gasoline Retail Facilities Consulting

SHEET CONTENTS:
EXISTING SITE PLAN/ DEMO PLAN

Date:	10-04-23
Scale:	AS SHOWN
Drawn:	RX
Job No.	

DATE LOG-REVISIONS

REV	DATE	DESCRIPTION

Sheet A1.0
of sheets

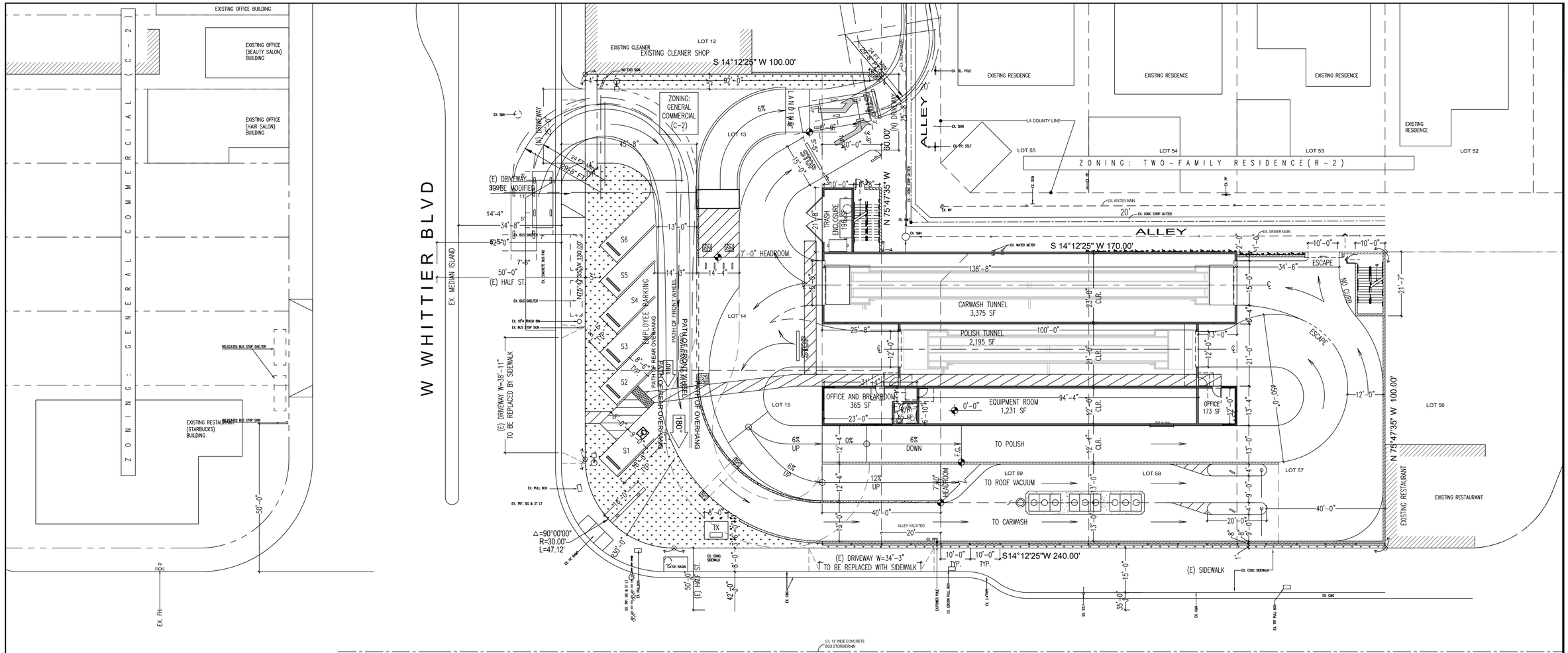

1 CONTEXT PLAN
SCALE: 1/16"=1'-0"

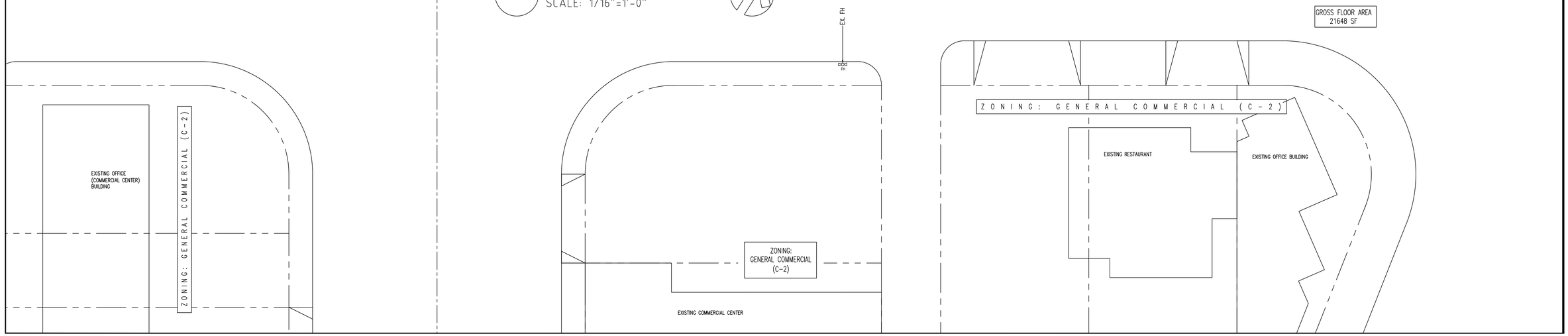

DOCUMENT PREPARED BY:
GASOLINE RETAIL FACILITIES CONSULTING
ATTN: ANDREW PASZTERKO - ARCHITECT
CALIFORNIA LIC. # C-12253
2055 NORTH ALVARADO STREET,
LOS ANGELES, CALIFORNIA 90039
ph: 323.665.0844, fax: 323.661.0723
andy@gazretail.com

OWNER:
113 N. GARFIELD LLC
ATTN:
RICHARD HARUTIUNIAN
213.840.2888
ARADINC@SBCGLOBAL.NET

PROJECT TITLE:
NEW CARWASH

ADDRESS: 113 N GARFIELD AVE, MONTEBELLO, CA 90640

LICENSED ARCHITECT
ANDREW E. PASZTERKO
Lic. No.: C-12253
RENEWAL DATE
MAY 31, 2025
STATE OF CALIFORNIA

Gasoline Retail Facilities Consulting

SHEET CONTENTS:
CONTEXT PLAN

Date:	10-04-23
Scale:	AS SHOWN
Drawn:	RX
Job No.	

DATE LOG-REVISIONS

REV	DATE	DESCRIPTION
△		
△		
△		
△		

Sheet A1.1
of sheets

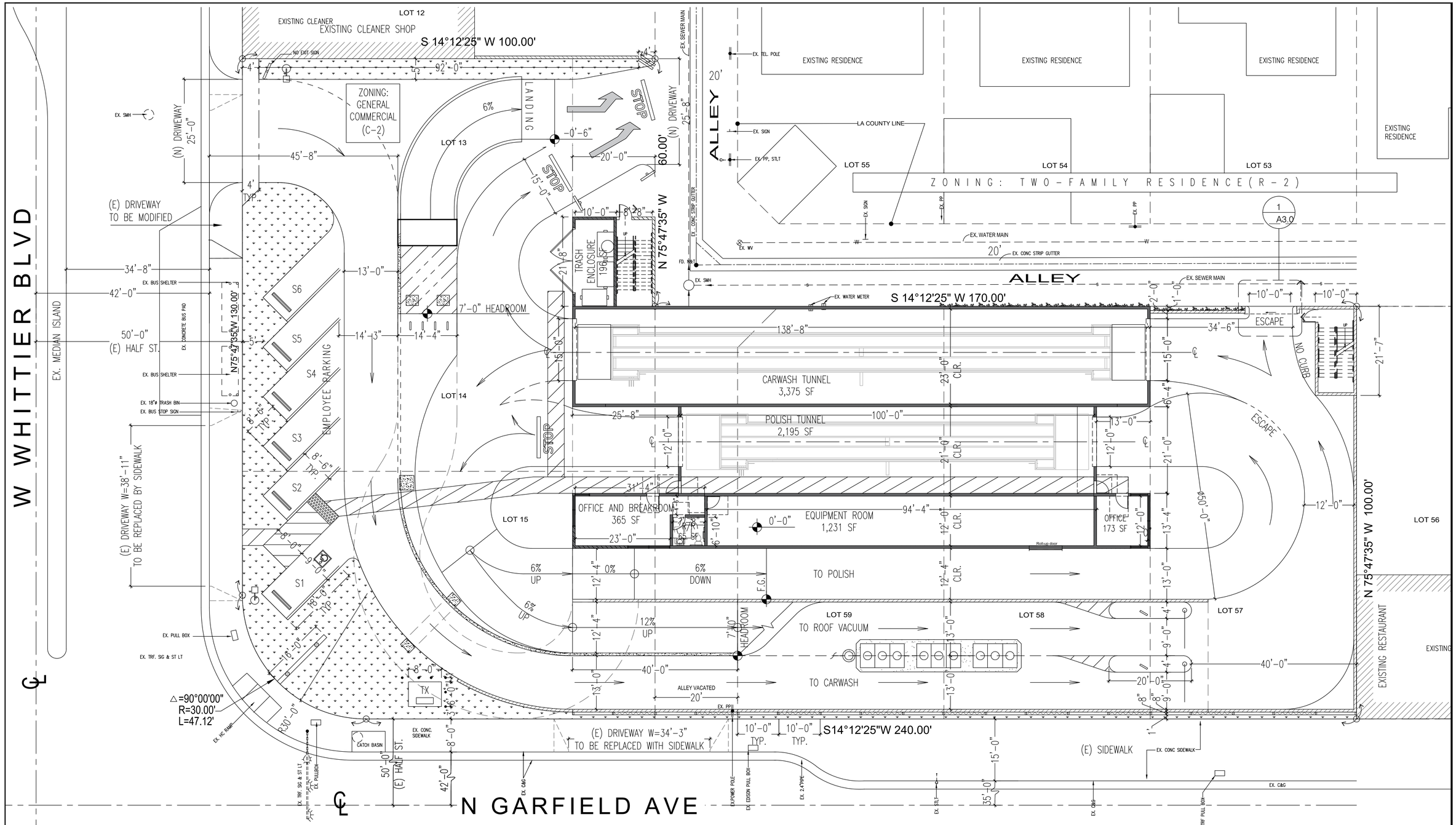

1 PROPOSED SITE/FLOOR PLAN

SCALE: 3/32"=1'-0"

DOCUMENT PREPARED BY:
GASOLINE RETAIL FACILITIES CONSULTING
ATTN: ANDREW PASZTERKO - ARCHITECT
CALIFORNIA LIC. # C-12253
2055 NORTH ALVARADO STREET,
LOS ANGELES, CALIFORNIA 90039
ph: 323.665.0844, fax: 323.661.0723
andy@gazretail.com

OWNER:
113 N. GARFIELD LLC
ATTN:
RICHARD HARUTIUNIAN
213.840.2888
ARADINC@SBCGLOBAL.NET

PROJECT TITLE:
NEW CARWASH

ADDRESS: 113 N GARFIELD AVE, MONTEBELLO, CA 90640

LICENSED ARCHITECT
ANDREW E. PASZTERKO
Lic. No. C-12253
RENEWAL DATE
MAY 31, 2025
STATE OF CALIFORNIA

Gasoline Retail Facilities Consulting

SHEET CONTENTS:
PROPOSED SITE PLAN

Date:	10-04-23
Scale:	AS SHOWN
Drawn:	RX
Job No.	

DATE LOG-REVISIONS

REV	DATE	DESCRIPTION
△		
△		
△		
△		

Sheet A1.2
of sheets

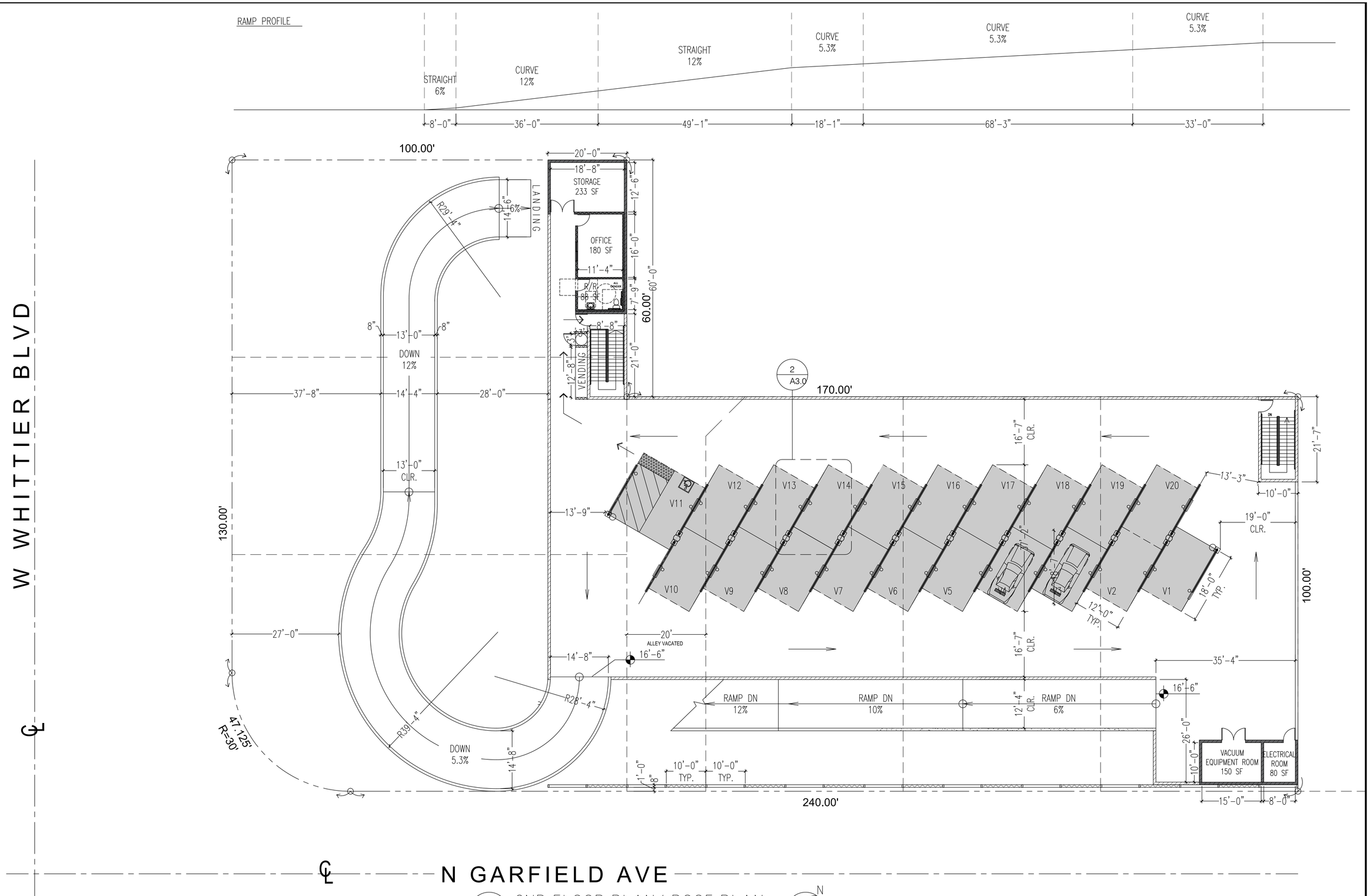

1 2ND FLOOR PLAN/ ROOF PLAN

SCALE: 3/32"=1'-0"

DOCUMENT PREPARED BY:
GASOLINE RETAIL FACILITIES CONSULTING
ATTN: ANDREW PASZTERKO - ARCHITECT
CALIFORNIA LIC. # C-12253
2055 NORTH ALVARADO STREET,
LOS ANGELES, CALIFORNIA 90039
ph: 323.665.0844, fax: 323.661.0723
andy@gazretail.com

OWNER:
113 N. GARFIELD LLC
ATTN:
RICHARD HARUTIUNIAN
213.840.2888
ARADINC@SBCGLOBAL.NET

PROJECT TITLE:
NEW CARWASH

ADDRESS: 113 N GARFIELD AVE, MONTEBELLO, CA 90640

LICENSED ARCHITECT
ANDREW E. PASZTERKO
Lic. No. C-12253
RENEWAL DATE
MAY 31, 2025
STATE OF CALIFORNIA

Gasoline Retail Facilities Consulting

SHEET CONTENTS:
2ND FLOOR PLAN & ROOF PLAN

Date:	10-04-23
Scale:	AS SHOWN
Drawn:	RX
Job No.	

DATE LOG-REVISIONS

REV	DATE	DESCRIPTION

Sheet A1.3
of sheets

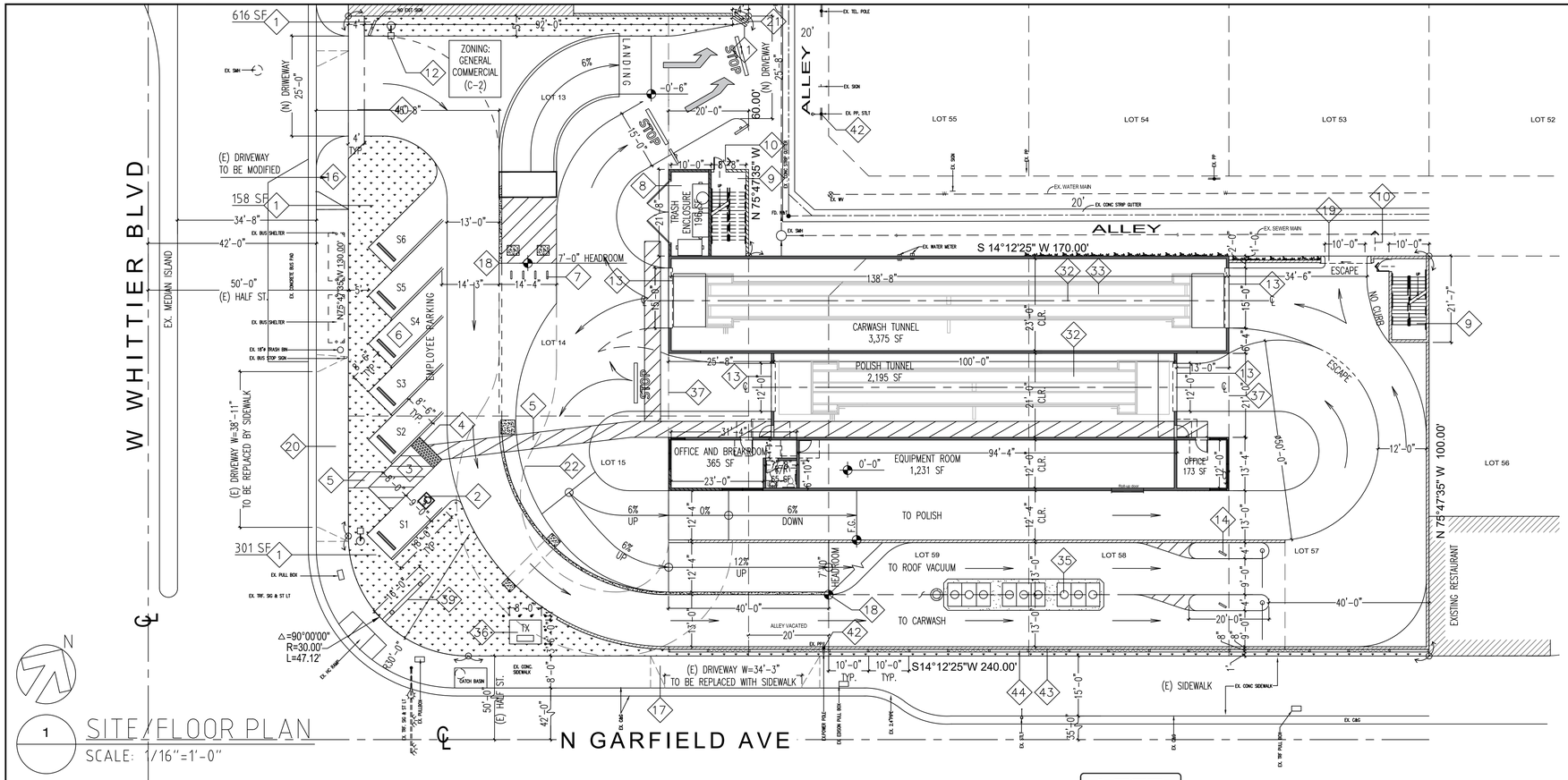

1 SITE/FLOOR PLAN
SCALE: 1/16"=1'-0"

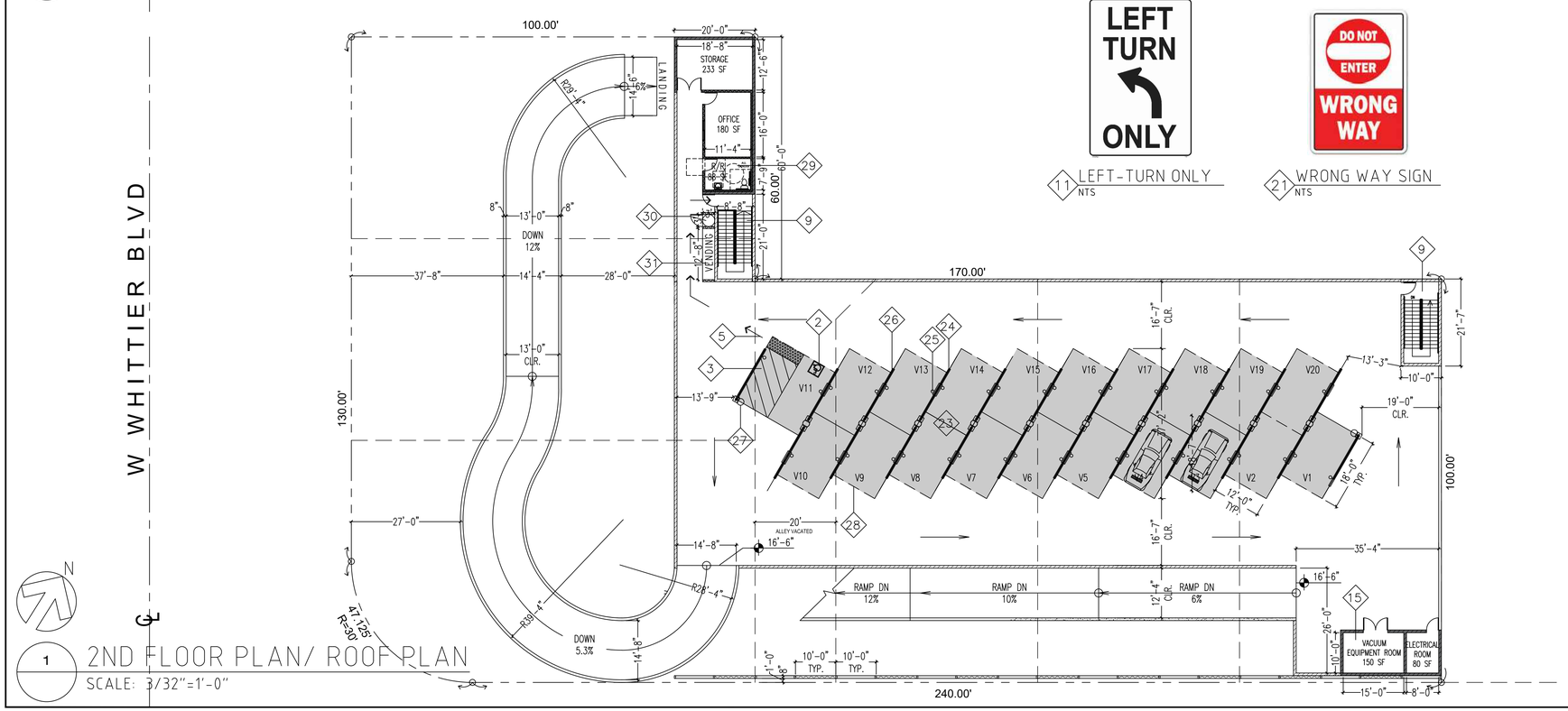

1 2ND FLOOR PLAN/ ROOF PLAN
SCALE: 3/32"=1'-0"

SITE & WALL LEGEND

- LANDSCAPE AREA
- 8" CMU WALL
- MONOLITHIC CONCRETE
- PARTITION/FURRING
- STOREFRONT

LEGEND

1. (N) LANDSCAPE
2. (N) HANDICAP PARKING MARK
3. (N) HANDICAP LOADING ZONE
4. (N) DISCERNABLE WARNING
5. (N) PATH OF TRAVEL TO STREET/OFFICE/RESTROOM
6. (N) STANDARD PARKING FOR EMPLOYEES (TYP. OF 6)
7. (N) SHORT TERM BICYCLE RACK (TYP. OF 4)
8. (N) TRASH ENCLOSURE
9. (N) FIRE STAIRWAY (TYP. OF 2)
10. (N) TRAVEL OF PATH FORM STAIRWAY TO PUBLIC STREET
11. (N) "LEFT-TURN ONLY" SIGN
12. (N) AREA LIGHT (TYP. OF 4)
13. (N) ROLL-UP SCREEN (TYP.)
14. (N) PAY POINT (TYP. OF 2)
15. VACUUM EQUIPMENT
16. MODIFICATION OF DRIVEWAY AS SHOWN
17. REPLACE (E) APPROACH WITH (N) CONCRETE SIDEWALK
18. 7' CLEAR HEADROOM MIN.
19. ESCAPE GATE TO BE REMAIN CLOSED EXCEPT FOR "EMERGENCY EXIT/ UNEXPECTED EXIT REQUEST"
20. (E) BUS SHELTER RELOCATED
21. (N) "WRONG WAY" SIGN
22. (N) RAMP ABOVE
23. (N) VACUUM POSITIONS (TYP. OF 20)
24. (N) VACUUM ARM (TYP.)
25. (N) VACUUM DROP - 2 PER CAR (TYP.)
26. (N) VACUUM LIGHT (TYP.)
27. (N) VACUUM COLLECT BIN (TYP.)
28. (N) TEXTILE VACUUM SHADING (TYP.)
29. (N) SINGLE USER RESTROOM
30. (N) TRASH CHUTE
31. (N) VENDING AREA
32. (N) CONVEYOR BELT
33. OMIT
34. (N) CONC. CATCH BASIN
35. (N) PRE-TREATMENT CLARIFIERS (TYP. OF 3)
36. (N) TRANSFORMER
37. 2ND FLOOR ABOVE
38. OMIT
39. (N) POLE SIGN
40. (N) PUBLIC WALK
41. OMIT
42. UNDERGROUND ELECTRICAL UTILITY ASSOCIATED WITH THIS POLE
43. 5' HIGH PONY WALL
44. ELEVATION SCREEN WALL (TYP.)

11 LEFT-TURN ONLY
NTS

21 WRONG WAY SIGN
NTS

DOCUMENT PREPARED BY:
GASOLINE RETAIL FACILITIES CONSULTING
ATTN: ANDREW PASZTERKO - ARCHITECT
CALIFORNIA LIC. # C-12253
2055 NORTH ALVARADO STREET,
LOS ANGELES, CALIFORNIA 90039
ph: 323.665.0844, fax: 323.661.0723
andy@gazretail.com

OWNER:
113 N. GARFIELD LLC
ATTN:
RICHARD HARUTIUNIAN
213.840.2888
ARADINC@SBCGLOBAL.NET

PROJECT TITLE:
NEW CARWASH

ADDRESS: 113 N GARFIELD AVE, MONTEBELLO, CA 90640

LICENSED ARCHITECT
ANDREW E. PASZTERKO
Lic. No.: C-12253
RENEWAL DATE
MAY 31, 2025
STATE OF CALIFORNIA

Gasoline Retail Facilities Consulting

SHEET CONTENTS:
PLAN W/ LEGEND

Date:	10-04-23
Scale:	AS SHOWN
Drawn:	RX
Job No.	

DATE LOG-REVISIONS

REV	DATE	DESCRIPTION
1		
2		
3		
4		

Sheet A1.4
of sheets

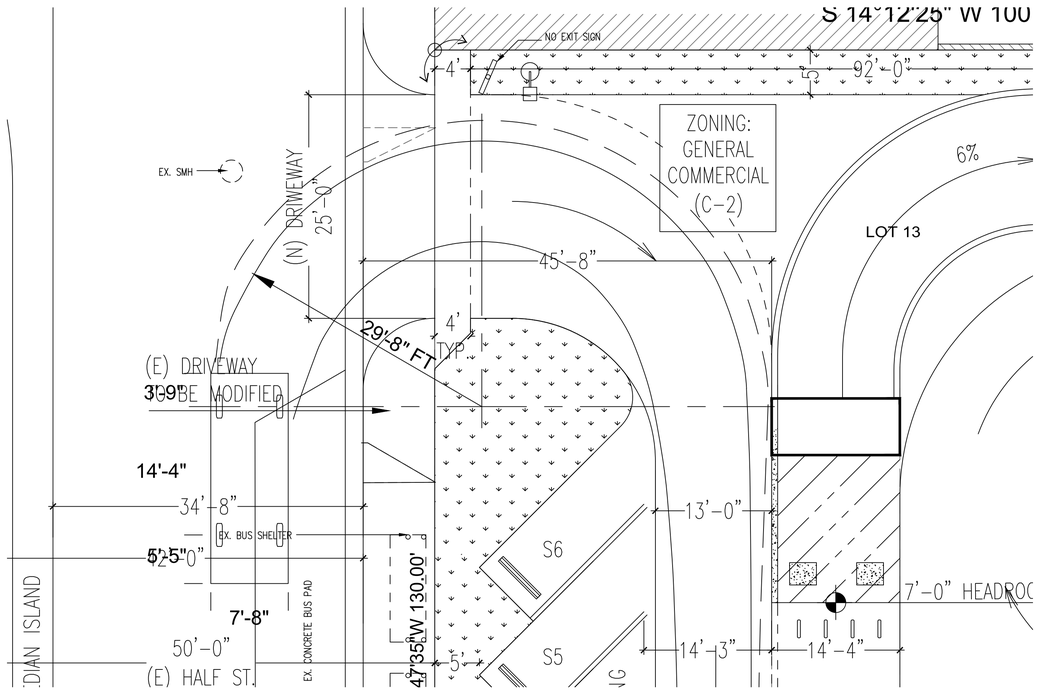

ENTRANCE: LWB PICKUP TRUCK TRUNING SAMPLE

SCALE: 1/8"=1'-0"

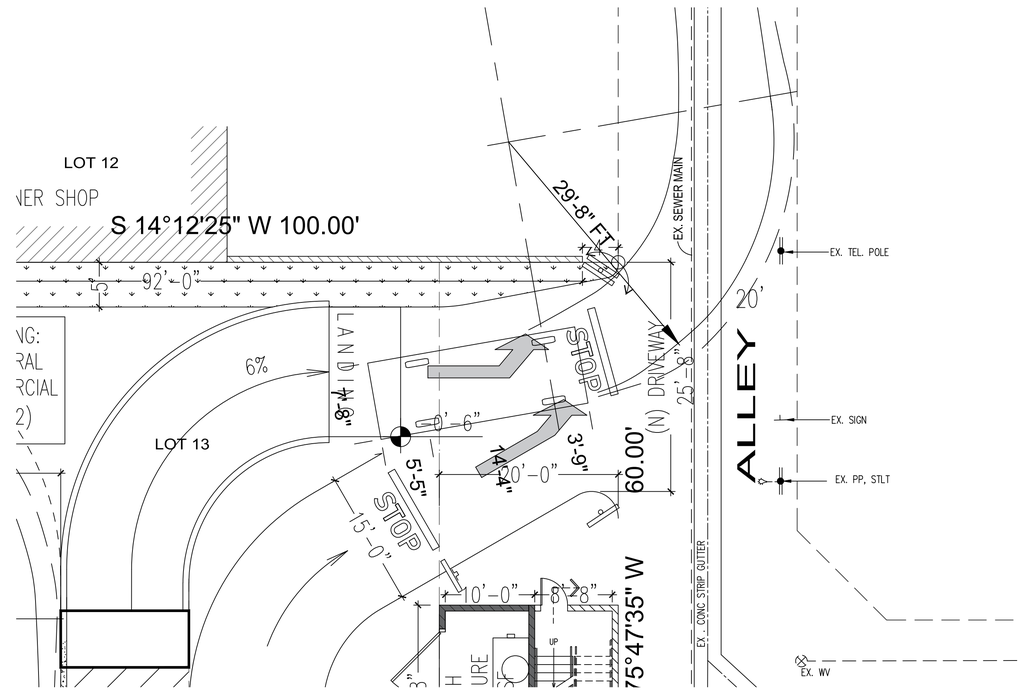

EXIT: LWB PICKUP TRUCK TURNING SAMPLE

SCALE: 1/8"=1'-0"

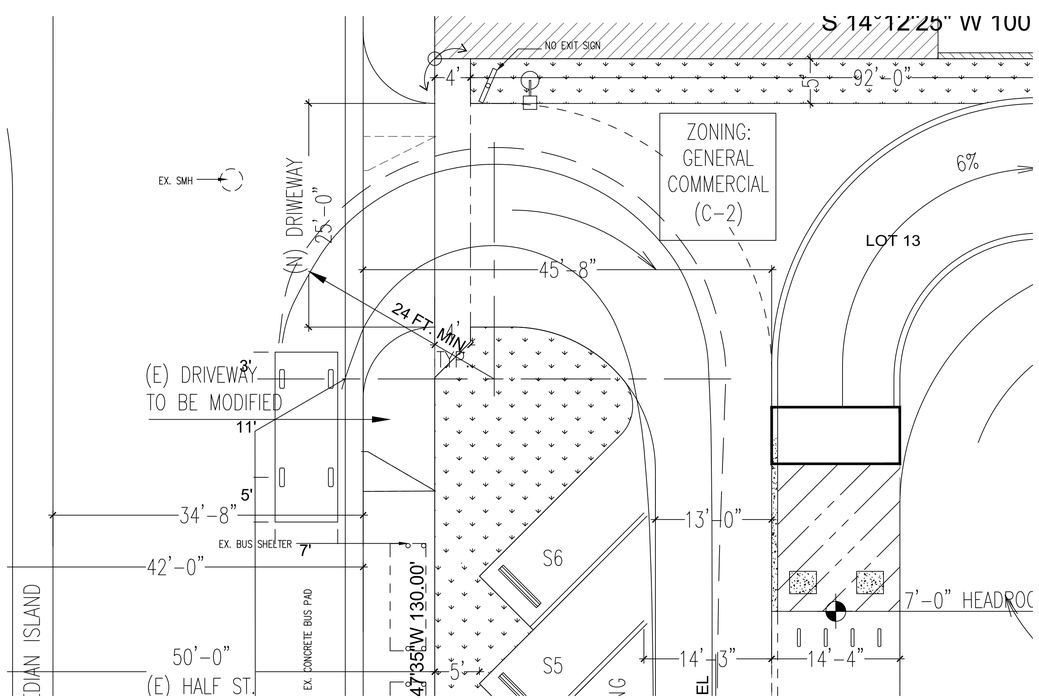

ENTRANCE: PASSENGER CAR TURNING SAMPLE

SCALE: 1/8"=1'-0"

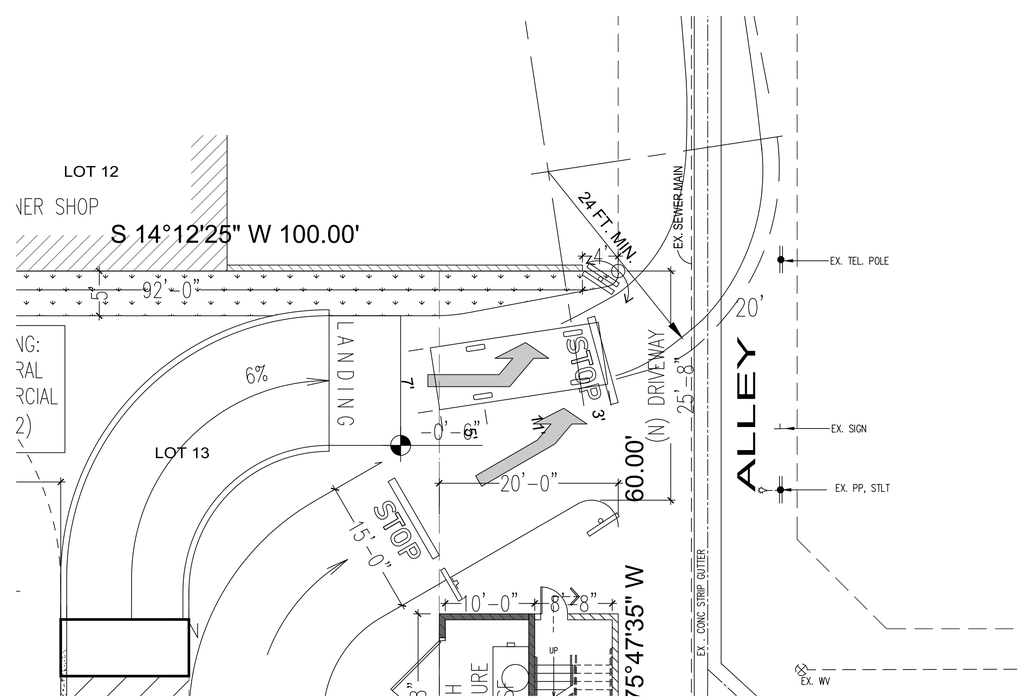

EXIT: PASSENGER CAR TURNING SAMPLE

SCALE: 1/8"=1'-0"

DOCUMENT PREPARED BY:
GASOLINE RETAIL FACILITIES CONSULTING
ATTN: ANDREW PASZTERKO - ARCHITECT
CALIFORNIA LIC. # C-12253
2055 NORTH ALVARADO STREET,
LOS ANGELES, CALIFORNIA 90039
ph: 323.665.0844, fax: 323.661.0723
andy@gazretail.com

OWNER:
113 N. GARFIELD LLC
ATTN:
RICHARD HARUTIUNIAN
213.840.2888
ARADINC@SBCGLOBAL.NET

PROJECT TITLE:
NEW CARWASH

ADDRESS: 113 N GARFIELD AVE, MONTEBELLO, CA 90640

LICENSED ARCHITECT
ANDREW E. PASZTERKO
Lic. No. C-12253
RENEWAL DATE
MAY 31, 2025
STATE OF CALIFORNIA

Gasoline
Retail
Facilities
Consulting

SHEET CONTENTS:
DRIVEWAY DETAILS

Date:	10-04-23
Scale:	AS SHOWN
Drawn:	RX
Job No.	

DATE LOG-REVISIONS

REV	DATE	DESCRIPTION

Sheet A1.5
of sheets

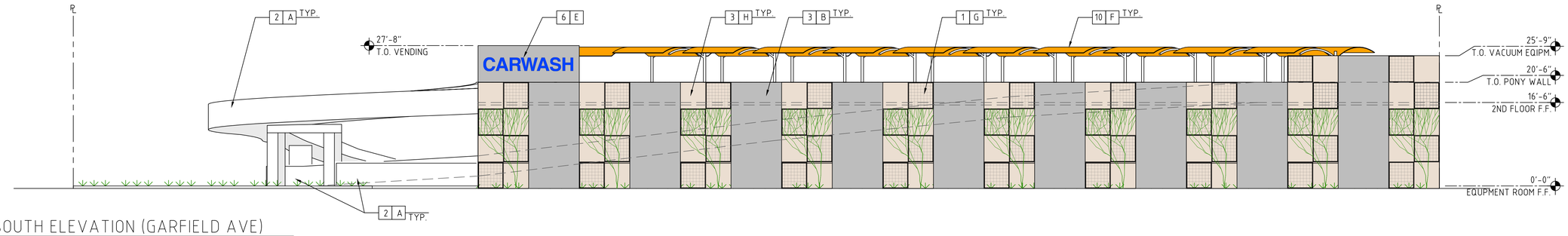

1 SOUTH ELEVATION (GARFIELD AVE)
SCALE: 3/32" = 1'-0"

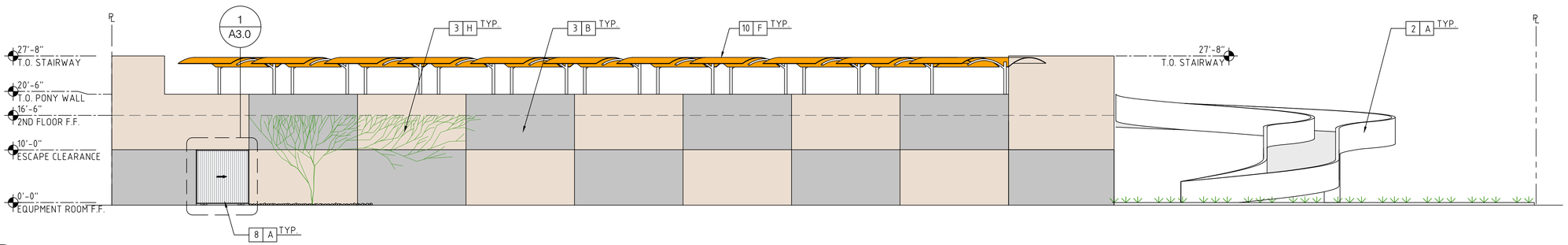

2 NORTH ELEVATION
SCALE: 3/32" = 1'-0"

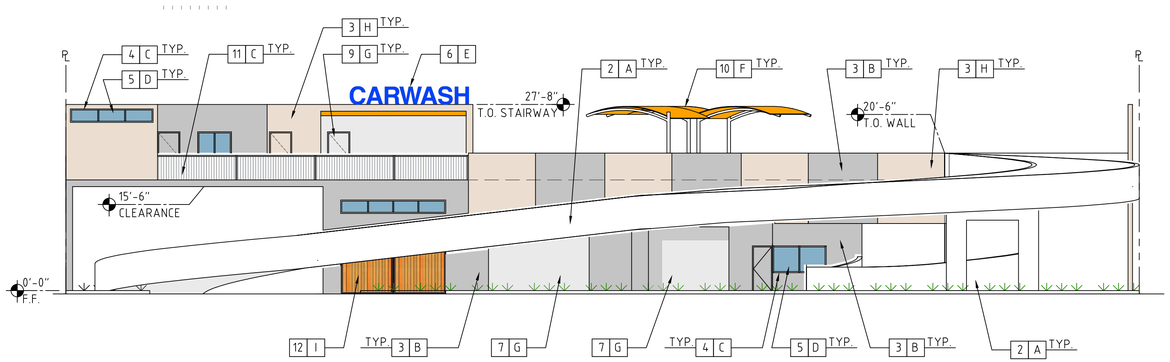

3 WEST ELEVATION (WHITTIER BLVD)
SCALE: 3/32" = 1'-0"

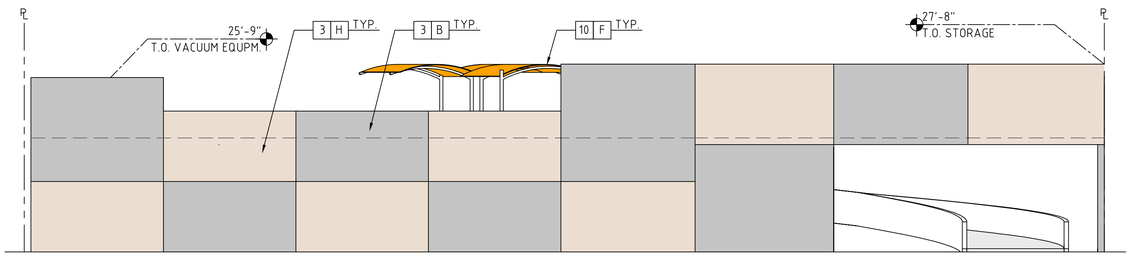

4 EAST ELEVATION
SCALE: 3/32" = 1'-0"

LEGEND

MARK	MATERIALS	MARK	MATERIALS
1	GREEN SCREEN TRELLISING SYSTEM	8	WROUGHT IRON SLIDING DOOR
2	CONCRETE PANEL	9	DOOR
3	SAND FLOAT STUCCO MACHINE APPLIED	10	VACUUM SHADING
4	ALUMINIUM STOREFRONT	11	WROUGHT IRON HANDRAILS
5	GLAZING	12	LAMINATE WOOD LINING
6	SIGN (SEPARATE PERMIT)	13	
7	ROLL-UP DOOR	14	

LEGEND

MARK	COLORS	MARK	COLORS
A	WHITE	H	LIGHT BEIGE
B	LIGHT GREY	I	WARM OAK
C	SILVER	J	
D	CLEAR	K	
E	BLUE (69,127,253)	L	
F	YELLOW ORANGE	M	
G	PAINT TO MATCH	N	

DOCUMENT PREPARED BY:
GASOLINE RETAIL FACILITIES CONSULTING
ATTN: ANDREW PASZTERKO - ARCHITECT
CALIFORNIA LIC. # C-12253
2055 NORTH ALVARADO STREET,
LOS ANGELES, CALIFORNIA 90039
ph: 323.665.0844, fax: 323.661.0723
andy@gazretail.com

OWNER:
113 N. GARFIELD LLC
ATTN:
RICHARD HARUTIUNIAN
213.840.2888
ARADINC@SBCGLOBAL.NET

PROJECT TITLE:
NEW CARWASH

ADDRESS: 113 N GARFIELD AVE, MONTEBELLO, CA 90640

LICENSED ARCHITECT
ANDREW E. PASZTERKO
Lic. No. C-12253
RENEWAL DATE
MAY 31, 2025
STATE OF CALIFORNIA

Gasoline Retail Facilities Consulting

SHEET CONTENTS:
ELEVATIONS

Date:	10-04-23
Scale:	AS SHOWN
Drawn:	RX
Job No.	

DATE LOG-REVISIONS

REV	DATE	DESCRIPTION
1		
2		
3		
4		

Sheet A2.0
of sheets

1 G

2 A

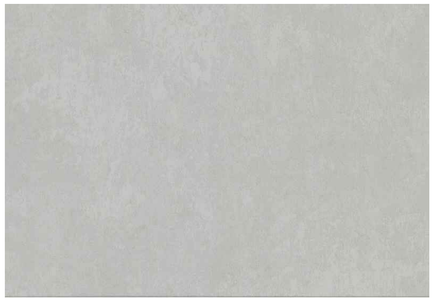

3 A

3 B

3 H

4 C

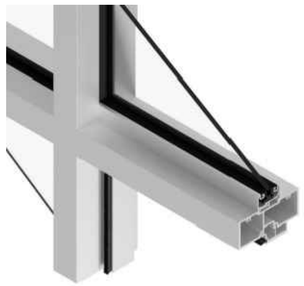

5 D

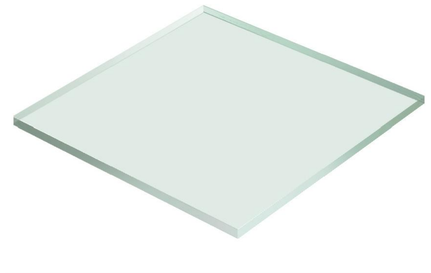

8 A

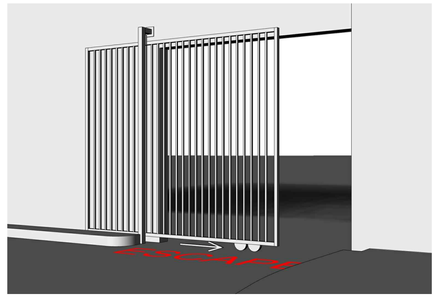

12 I

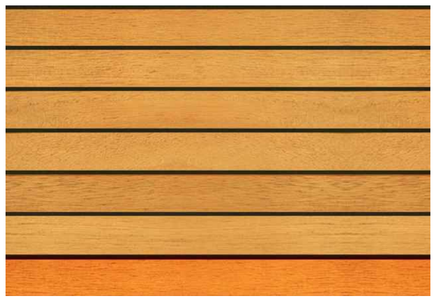

LEGEND

MARK	MATERIALS	MARK	MATERIALS
1	GREEN SCREEN TRELLISING SYSTEM	8	WROUGHT IRON SLIDING DOOR
2	CONCRETE PANEL	9	DOOR
3	SAND FLOAT STUCCO MACHINE APPLIED	10	VACUUM SHADING
4	ALUMINIUM STOREFRONT	11	WROUGHT IRON HANDRAILS
5	GLAZING	12	LAMINATE WOOD LINING
6	SIGN (SEPARATE PERMIT)	13	
7	ROLL-UP DOOR	14	

LEGEND

MARK	COLORS	MARK	COLORS
A	WHITE	H	LIGHT BEIGE
B	LIGHT GREY	I	WARM OAK
C	SILVER	J	
D	CLEAR	K	
E	BLUE (69,127,253)	L	
F	YELLOW ORANGE	M	
G	PAINT TO MATCH	N	

DOCUMENT PREPARED BY:
GASOLINE RETAIL FACILITIES CONSULTING
ATTN: ANDREW PASZTERKO - ARCHITECT
CALIFORNIA LIC. # C-12253
2055 NORTH ALVARADO STREET,
LOS ANGELES, CALIFORNIA 90039
ph: 323.665.0844, fax: 323.661.0723
andy@gazretail.com

OWNER:
113 N. GARFIELD LLC
ATTN:
RICHARD HARUTIUNIAN
213.840.2888
ARADINC@SBCGLOBAL.NET

PROJECT TITLE:
NEW CARWASH

ADDRESS: 113 N GARFIELD AVE, MONTEBELLO, CA 90640

LICENSED ARCHITECT
ANDREW E. PASZTERKO
Lic. No.: C-12253
RENEWAL DATE
MAY 31, 2025
STATE OF CALIFORNIA

Gasoline Retail Facilities Consulting

SHEET CONTENTS:
MATERIAL BOARD

Date:	10-04-23
Scale:	AS SHOWN
Drawn:	RX
Job No.	

DATE LOG-REVISIONS

REV	DATE	DESCRIPTION

Sheet A3.0
of sheets

11' WROUGHT IRON SLIDING DOOR

RAILS 2"X2" X 14GA SOLID
PICKETS 1"X1" X 16GA SOLID
CLEAR SPACE BETWEEN PICKETS = $3\frac{7}{8}$"

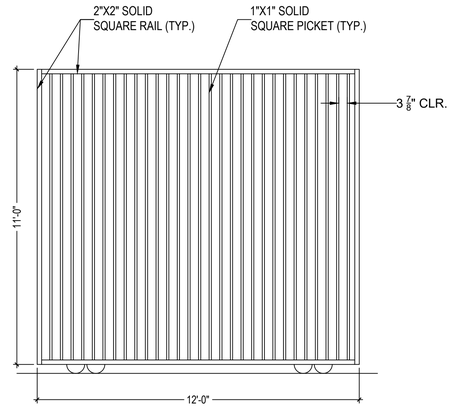

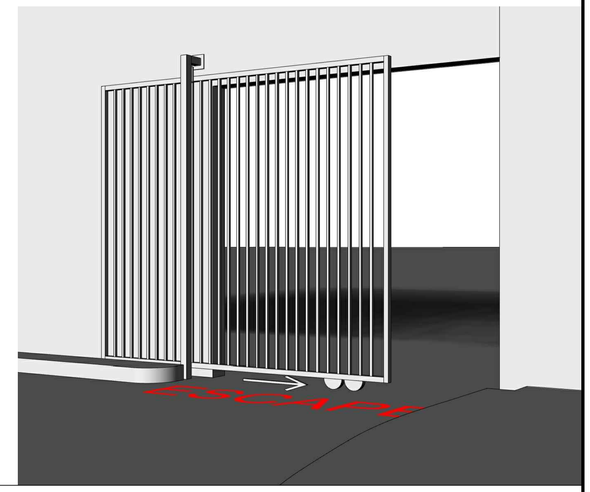

1 DETAIL - WROUGHT IRON SLIDING DOOR
NTS

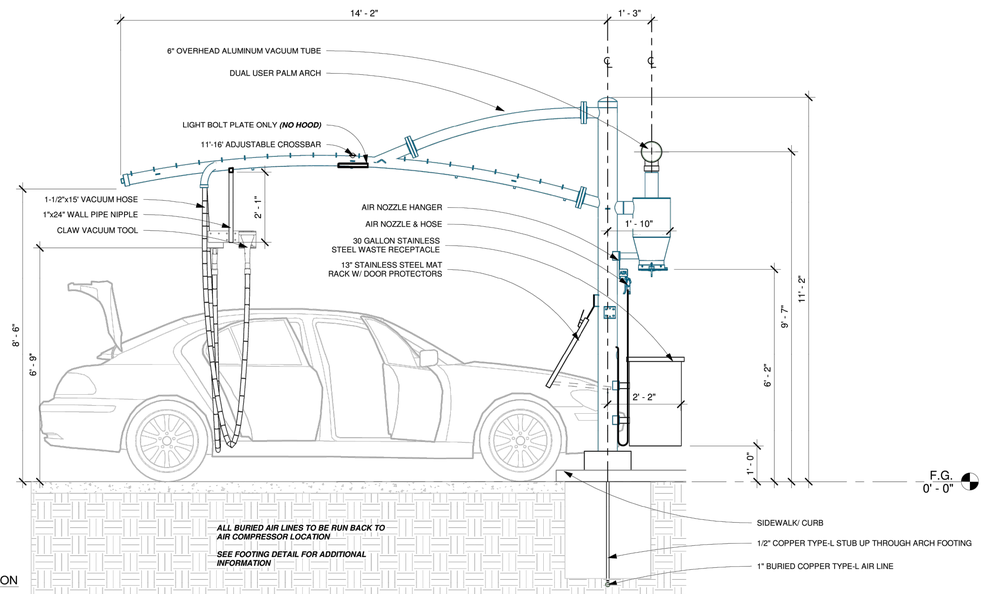

1 PARKING ELEVATION

2 DETAIL - VACUUM SHADING STRUCTURE
NTS

DOCUMENT PREPARED BY:
GASOLINE RETAIL FACILITIES CONSULTING
ATTN: ANDREW PASZTERKO - ARCHITECT
CALIFORNIA LIC. # C-12253
2055 NORTH ALVARADO STREET,
LOS ANGELES, CALIFORNIA 90039
ph: 323.665.0844, fax: 323.661.0723
andy@gazretail.com

OWNER:
113 N. GARFIELD LLC
ATTN:
RICHARD HARUTIUNIAN
213.840.2888
ARADINC@SBCGLOBAL.NET

PROJECT TITLE:
NEW CARWASH

ADDRESS: 113 N GARFIELD AVE, MONTEBELLO, CA 90640

LICENSED ARCHITECT
ANDREW E. PASZTERKO
Lic. No.: C-12253
RENEWAL DATE
MAY 31, 2025
STATE OF CALIFORNIA

Gasoline
Retail
Facilities
Consulting

SHEET CONTENTS:
DETAILS

Date:	10-04-23
Scale:	AS SHOWN
Drawn:	RX
Job No.	

DATE LOG-REVISIONS

REV	DATE	DESCRIPTION
△		
△		
△		
△		

Sheet A4.0
of sheets

NEW CARWASH · 113 N GARFIELD AVE MONTABELLO CA · GRFC ARCHITECTS

NEW CARWASH · 113 N GARFIELD AVE MONTABELLO CA · GRFC ARCHITECTS

NEW CARWASH · 113 N GARFIELD AVE MONTABELLO CA · GRFC ARCHITECTS

ITEM # 4

CITY OF MONTEBELLO
PLANNING COMMISSION AGENDA STAFF REPORT

TO: Members of the Planning Commission

FROM: Joseph Palombi, Planning & Community Development Director

BY: Emilie Fernandez, Assistant Planner

SUBJECT: **Site Plan Review ("SPR") (Case No. PC-2023-0017-SPR) to allow the installation of a new 7,150 square foot pre-manufactured metal warehouse for general storage of furniture and auto parts for Ford of Montebello pursuant to Montebello Municipal Code Chapter 17.74 et seq. (Site Plan Review), on an existing lot located at 652 South Maple Avenue.**

DATE: January 16, 2024

RECOMMENDATION(S):

It is recommended that the Planning Commission conduct a public hearing and take the following action:

1. ADOPT Resolution No. 22-23 Approving the Site Plan Review ("SPR") No. PC-2023-0017-SPR with conditions to allow the installation of a new 7,150 square foot pre-manufactured metal warehouse (the "Project") for the property located at 652 South Maple Avenue (the "Project Site") with conditions pursuant to Montebello Municipal Code ("MMC") Chapter 17.74 - Site Plan Review; and
2. DETERMINE AND FIND that the project (ENV No. 15-23-CE) is exempt from the California Environmental Quality Act (CEQA) pursuant to CEQA Guidelines Section (15332) - Class 32 (In-Fill Development) as it meets the conditions set forth under class 32 (In-Fill Development Projects).

FISCAL IMPACT:

None.

BACKGROUND:

On October 10, 2023, Robert Plant (the "Contact Person") on behalf of Ford of Montebello (the "Applicant") and Draneb Properties LLC (the "Property Owner") filed a Master Land Use Application requesting Site Plan Review to allow the installation of a 7,150 square foot pre-manufactured metal warehouse at the Project Site.

On October 16, 2023, staff issued a deemed complete letter to the Applicant pursuant to California Government Code Section 65943 et seq.

PROJECT /APPLICANT INFORMATION

Project Location: 652 South Maple Avenue
Project Applicant: Ford of Montebello
Property Owner: Draneb Properties LLC
General Plan Designation: Light Manufacturing
Zoning: M-1 (Light Manufacturing)
Existing Use on Property: Remote inventory lot for Ford of Montebello

PROJECT DESCRIPTION

The Applicant seeks Site Plan Review approval to allow the installation of a 7,150 square foot pre-manufactured metal warehouse to be used as a storage area for auto related parts and furniture for Ford of Montebello.

The proposed warehouse will be made of ribbed metal siding and a class "B" metal roof. A metal building is manufactured in a factory that melts down its waste and scape metal in the making of the building. The metal building will be installed in 3-4 weeks. The building will not be visible to the neighborhood as it will be placed behind a 6 feet tall green hedge and an original brick warehouse from the 1950s. The building is only 24 feet tall and located in the center of the property. The height is well below 35 feet that is allowed in the light manufacturing zone. No one will be working based off this location, it will be used for overflow parts for the Ford of Montebello. There is a trash area, that is composed of standard dumpsters that have been in operation for over 10 years on the site. The proposed building is not designed for roof top equipment. Any equipment will have to be on grade in the form of a split system. Fan coil will be installed on the ground and a ceiling fan inside the building. There are no signs proposed for this project as customers do not come to this facility, it is strictly for staff. Noise will not be an issue, on rare occasions there will be a forklift on the site to restock the warehouse. Typically, there will be little to no noise during standard business hours. The bulk of materials stored will be body panels, bumpers, and frame parts. Oils and flammable liquids would not be stored on the project site.

ENVIRONMENTAL:

In accordance with the California Environmental Quality Act ("CEQA"), the proposed Site Plan Review, Case No. PC-2023-0017-SPR/ENV 15-23-CE, is considered a "project,"

per the (CEQA) definition of a "project." The project is considered a Class 32 and Categorically Exempt per CEQA Guidelines Section 15332 (In-Fill Development Projects), and none of the limitations set forth in CEQA Guidelines Section 15300.2 apply.

In order to qualify under an exemption pursuant to Class 32 of CEQA Guidelines Section 15332 (In Fill Development Projects), the following environmental findings must also be made:

A. The project is consistent with the applicable general plan designation and all applicable general plan policies as well as with applicable zoning designation and regulations.

The proposed project conforms to the Montebello General Plan, Land Use Element in that the General Plan Land Use designation for the site is industrial, and the zoning designation is M-1 (Light Manufacturing).

B. The proposed development occurs within the city limits on a project site of no more than five (5) acres substantially surrounded by urban uses.

The proposed development shall occur on a 98,658-square-foot (2.27 acres) lot located on South Maple Avenue and West Mines Ave within city limits and thus, is less than the maximum five acres specified in Section 15332(b) for this exemption. The site is surrounded by existing developed light manufacturing to the North, South, West, and single family residential to the East.

C. The project has no value as habitat for endangered, rare or threatened species.

The proposed project has been previously developed with a warehouse. The subject property is surrounded by other manufacturing zones.

D. Approval of the project would not result in any significant effects relating to traffic, noise, air quality, or water quality.

The proposed project shall not have any significant effects relating to traffic, noise, air quality, or water quality as the site is currently developed with a warehouse.

E. The site can be adequately served by all required utilities and public services.

The project has been reviewed by City staff and it has been determined that it can be adequately served by all required utilities and public services.

ANALYSIS:

Project Site
The Project Site is located on a lot on S Maple Avenue between West Mines Avene and Beach Street with a zoning designation of M-1, Light Manufacturing. The Project Site is comprised of a total lot area of approximately 98,658 square feet (2.27 acres). The Project Site is currently developed with an 8,625 square feet building on the remote

inventory lot for the Ford of Montebello. There will be no change to the existing warehouse on the project site. The project site is surrounded by M-1 light manufacturing and R-1 single family residence to the east.

The following table list the zoning designations of the surrounding land uses:

Direction	Zone	Land Use
North	M-1	Light Manufacturing
South	M-1	Light Manufacturing
East	R-1	Single-Family Residential
West	M-1	Light Manufacturing

The following is intended to illustrate the development diagram associated with the Site Plan Review:

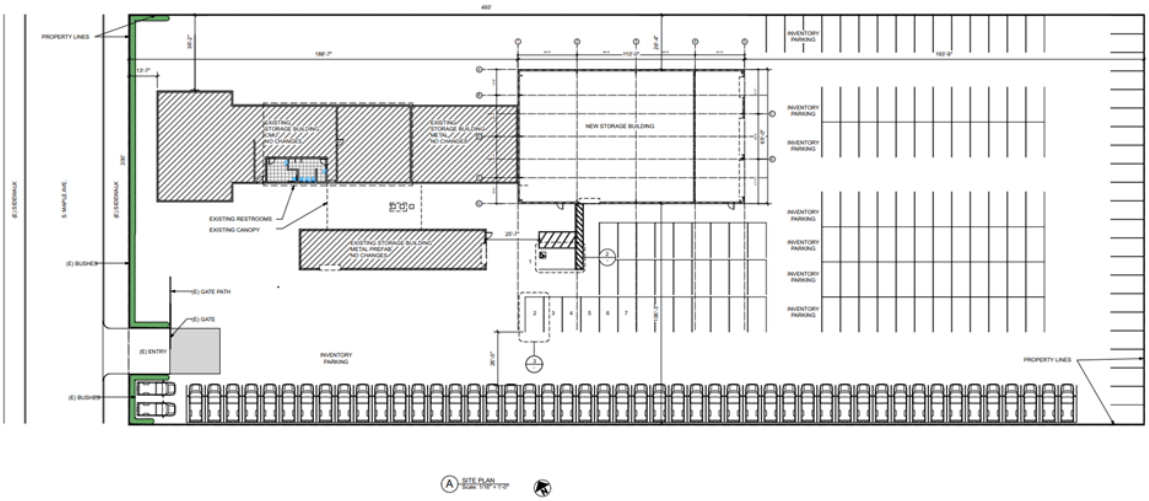

GENERAL PLAN

The Project conforms to the following goals and policies of the Montebello General Plan.

General Plan Noise Element Objective #3 Industrial Zones states that “Noise levels within industrial zones may be higher than that in residential or commercial zones”.

General Plan Land Use Element Goal #4 states “To provide for growth and development of an industrial area in a manner compatible with other uses”.

General Plan Circulation Element Goal #1 states that “To facilitate traffic movement and alleviate congestion in and around the city”.

The proposed project conforms to the City of Montebello General Plan Land Use Element as the proposed use will allow the growth of an industrial area. Montebello community benefits from the addition of the warehouse because currently the proposed parts are in the City of Alhambra. The client staff drives to Alhambra every time they need one of these parts. With this development the staff of Ford of Montebello will have all the slow-moving parts at one location, reducing traffic across the city. With the current use of the

industrial building, this property is not being utilized completely and the project site can be expanded to accommodate more warehouse space. The installation of this building supports the general plan noise goals as even though the industrial area allows more noise than residential and commercial, this warehouse is much quieter than a typical manufacturing use that is allowed through the noise element of the general plan.

REQUIRED FINDINGS MONTEBELLO MUNICIPAL CODE (MMC)
SITE PLAN REVIEW (MMC 17.74)

The purpose of the site plan review is to minimize or preclude potential adverse impacts to the public interest or on abutting properties and adjacent residential, commercial, and industrial neighborhoods, resulting from the design or layout of a proposed development.

Section 17.74.030- When required explains that a site plan review is required for all commercial and industrial projects involving the construction of five thousand square feet or more of building area.

Pursuant to Section 17.74.070 of the MMC, before any site plan review shall be granted, all the following findings must be made:

A. That the proposed design for improvement complies with all requirements of the Montebello Municipal Code;

The proposed design meets all setbacks, height requirements, common and private space requirements. The unit does not exceed the floor area ratio allowed and the parking requirements are exceeded. The building will be placed behind a green hedge 6 feet tall and an original brick warehouse from the 1950s. A Site Plan is required due to the commercial project resulting in the construction of five thousand or more feet of building area. The proposed project is 7,150 square feet. according to Section 17.74.030.

B. That the proposed design for improvement is consistent with the general plan; and

The proposed project site is consistent with the general plan and reflects the goals that were set in place when designating certain zoning areas for manufacturing use. This area is zoned for light manufacturing and the addition of the warehouse will not change the land use of the property. Land Use Element Goal #4: To provide for growth and development of an industrial area in a manner compatible with other uses.

C. That the proposed design for improvement will not have any significant adverse impact on the surrounding properties or on the general public welfare.

The proposed addition will not have any significant adverse impact on the surrounding properties as the surrounding area is currently developed with other industrial zoned properties. North, South, and West of the project site are all zoned for light manufacturing. East of the property is Single family residential. To minimize the effects on the single-family residents, the applicant will be planting two trees to minimize the view that can be seen from the residential units to the East. This type of building has very little public traffic,

creates very little noise, and does not burn. All material for the building is manufactured in a factory hundreds of miles from the project site. The time to install the building is approximately 3-4 weeks versus a tilt-up concrete building that would take 6-7 months to construct and would cause traffic, disruption, and noise. The addition of this project will be consistent with the surrounding land uses and will not have an adverse impact on surrounding properties.

SUMMARY:

REPORTS RECEIVED

The application for Case No. PC-2023-0017-SPR was forwarded to the Fire Department, Building Department, Police Department, Recreation and Community Services Department, and Public Works Department for review, comments, and conditions. Below are the conditions that were received.

A. Planning Division Conditions

1. The Applicant shall defend, indemnify, and hold harmless the city, its elected and appointed officials, agents, officers, and employees from any claim, action, or proceeding brought against the city, its elected and appointed officials, agents, officers, or employees arising out of, or which are related to the Applicant's project or application (collectively referred to as "proceedings"). The indemnification shall include, but not be limited to, damages, fees and/or costs awarded against the City, if any, and cost of suit, attorney's fees, and other costs, liabilities, and expenses incurred or awarded in connection with the proceedings whether incurred by the Applicant, the city and/or the parties initiating or bringing such proceedings. This indemnity provision shall include the Applicant's obligation to indemnify the city for all the city's costs, fees, and damages that the city incurs in enforcing the indemnification provisions set forth herein. The City shall have the right to choose its own legal counsel to represent the City's interest in the proceedings.
2. The development and utilization of the subject site shall conform to the allowed use, except as provided for herein and by subsequent revisions found by the Director of Planning and Community Development ("Director") to be in substantial compliance with these provisions.
3. The development and utilization of the subject site shall be consistent with all of the provisions of the MMC and SPR (Case No. PC-2023-0017-SPR) and the specifications of the Planning Division.
4. Within thirty (30) days of the City Planning Division transmittal of the Acceptance Form, the Applicant shall sign and return a copy of the Acceptance Form, agreeing to the conditions of approval and acknowledging that failure to comply with such conditions shall constitute grounds for potential revocation of the permit approval. Failure to return the Acceptance Form within thirty (30) days shall constitute grounds for terminating the permit.
5. In the event the Applicant violates or fails to comply with any conditions of approval of this permit, no further permits, licenses, approvals, or certificate of occupancy shall be issued until such violation(s) have been fully remedied.

6. No signs shall be installed on the site until a sign permit has been approved by the Planning Department and Building & Safety Division in conformance with the provisions set forth in Chapter 17.62.080 ("Signs- Residential zones") of the MMC and the provisions set forth in the SPR.
7. The approval of the entitlement shall expire if the rights granted are not exercised within one (1) year from the SPR's effective date. Exercise of right shall mean issuance of a building permit to commence construction or similar activities demonstrating the intent to proceed with the project, as determined by the director.
8. The Director, at any time, can call for a review of the approved conditions of approval at a duly noticed public hearing before the Planning Commission. These condition(s) may be modified, or new condition(s) added to reduce any impacts of the use (Case No. PC-2023-0017-SPR).
9. The Applicant or successor in interest shall meet the applicable code requirements and all other City Department regulations.
10. All applicable conditions of approval from previous entitlements on the property shall remain in full force and effect, unless otherwise specifically noted in this Resolution.
11. The property owner will bear the full costs of all monitoring and inspection activities to be conducted by City staff, or its designated representative(s), as necessary to ensure compliance with the conditions of this Resolution.
12. Any change, expansion, intensification and/or modification to the proposed plans use, or mode of operations shall be subject to the review and approval by the Director who may take action or call for review by the Planning Commission at a noticed public hearing.
13. This approval shall not supersede the approval of any other responsible agencies. The Applicant shall comply with all Federal, State and local laws.
14. The approval of this SPR (Case No. PC-2023-0017-SPR) can be extended up to and not to exceed an additional two (2) years with a written request by the property owner thirty (30) days prior to the expiration date stating the reason and need for an extension and upon review and approval by the Director.
15. In the event of a violation of the conditions of approval, no further permits, licenses, approvals or certificates of occupancy shall be issued until such violation has been fully remedied.
16. The development and utilization of the site shall comply with all the provisions of all of the current Building, Plumbing, Mechanical, Electrical Codes, and City Ordinances, as well as additional requirements from the Montebello Building and Safety Division.
17. The development and utilization of the site shall be subject to the review and approval of the Public Works Department. Additional Montebello Public Works Department requirements may be required prior to issuing building permits.
18. The development and utilization of the site shall comply with all the provisions of all of the California Fire Code, International Fire Code, and National Fire Protection Association standards as well as additional requirements from the Montebello Fire Department.
19. Modification to Plans. Subsequent modification to this approval, which do not intensify the use, including but not limited to reorientation of structures, alteration of parking and circulation design, minor changes to the Conditions of Approval, interpretations of the Conditions of Approval relative to intent, necessity of, and timing,

may be approved by the Director within a 25% deviation, unless the Director requires a Substantial Conformance or revised Permit application in accordance with the City Development Code.

20. The Applicant shall contact the Planning Division to arrange a Planning Inspection of the site prior to the release of occupancy/utilities. This inspection is to confirm that the conditions of approval and code requirements have been satisfied.

21. The Applicant shall submit detailed landscape and irrigation plans prepared by a licensed Landscape Architect, which meet the requirements set forth in MMC shall be required as a part of the project Plan Check review and approval process. Plans shall be forwarded to the Planning Division for final approval prior to issuance of building permits.

22. A copy of the approved Resolution shall be attached to the construction plans for any site improvement at the submittal of plans for plan check.

23. It is the responsibility of the property owner to have all graffiti on the site removed within twenty-four (24) hours of its appearance, or be subject to citation from the City Code Enforcement Division.

24. All improvements to the subject property shall be in compliance with all City Ordinances.

25. The hours of construction shall be 7:00 a.m. to 8:00 p.m., Monday through Friday, and weekends and holidays 9:00 a.m. to 6:00 p.m. as restricted by the MMC Section 9.08.050.

26. The street shall be swept at the end of the day if visible soil material is carried onto adjacent public paved roads.

27. The guest parking spaces shall be posted and striped with double lines spaced six (6) inches apart and shall comply with the City's off-street parking requirements as per MMC Section 17.52.070. Such striping shall be shown on the plans submitted for plan check.

28. Any parking space that fronts a building wall or fence with no separation between the front end of the parking space and the wall or fence, shall be provided with a concrete wheel stop or curb barrier not less than two (2) feet from such wall or fence property line. Such wheel stop or curb barrier shall be securely installed and maintained.

29. An application for a Lot Tie to hold the two contiguous parcels as one site and shall be approved prior to the issuance of building permits.

30. The specifications of the Montebello Public Works Department and the Engineering Division shall be complied with:

The Applicant will continue to work with the Public Works Department and Engineering Division to finalize the certification of the Lot Tie and will, upon request, provide the Public Works Department with any additional information or documentation required.

31. The landscape plan shall conform to the MMC requirements. Shrubs shall not be less than three (3) feet in height when planted and cover not less than thirty (30) percent of the landscaped area. All landscaping shall cover the designated planting areas from the outset.

32. All trees shall be at least twenty-four inch (24") box or equivalent.

33. All landscape planters shall be surrounded by a six (6) inch concrete curb.

34. A trash enclosure shall be constructed of decorative masonry block or masonry block with decorative finish, such as stucco, and view-obscuring doors that are compatible with the main residence, subject to the final review and approval of the

Planning Department. The applicant shall reflect this requirement on the plans submitted for plan check.

35. All existing and proposed utilities (Gas, Electricity, Communications, etc.) shall be placed underground. The applicant shall reflect this requirement on plans submitted for "Plan Check".

36. All outdoor utilities or machinery located outside the exterior walls, including roof-mounted equipment, shall be completely screened from view from any public right-of-way or adjacent residential use by either view obscuring landscaping or architectural features of the main building (i.e. parapet walls, façade extension, etc.), subject to the final review and approval of the Planning Department.

37. Any inevitable exposed wires shall be neatly bolted and painted to match the building color.

38. The exterior of all structures and walls shall be a neutral color scheme and shall be consistent with the provisions of the Color Ordinance of the City of Montebello, subject to the review and approval of the Planning Department.

39. Any substantial change or modification to the proposed site plan shall be subject to review and approval by the Planning Commission.

B. <u>Building Department Comments</u>

1. The second sheet of building plans is to list all conditions of approval and to include a copy of the Planning Commission Decision letter. This information shall be incorporated into the plans prior to the first submittal for plan check.

2. Plans prepared in compliance with the current Building Code shall be submitted to Building Division for review prior to permit issuance.

3. Fees shall be paid to the County of Los Angeles Sanitation District prior to issuance of the building permit.

4. An application to assign unit numbers shall be filed with the City prior to plan check submittal.

5. In accordance with paragraph 5538(b) of the California Business and Professions Code, plans are to be prepared and stamped by a licensed architect.

6. Structural calculations prepared under the direction of an architect, civil engineer or structural engineer shall be provided.

7. A geotechnical and soils investigation report is required, the duties of the soils engineer of record, as indicated on the first sheet of the approved plans, shall include the following:

   a) Observation of cleared areas and benches prepared to receive fill.
   b) Observation of the removal of all unsuitable soils and other materials.
   c) The approval of soils to be used as fill material;
   d) Inspection of compaction and placement of fill;
   e) The testing of compacted fills; and
   f) The inspection of review of drainage devices.

8. The owner shall retain the soils engineer preparing the Preliminary Soils and/or Geotechnical Investigation accepted by the City for observation of all grading, site preparation, and compaction testing. Observation and testing shall not be performed by other soils and/or geotechnical engineer unless the subsequent soils and/or geotechnical engineer submits and has accepted by the City, a new Preliminary Soils and/or Geotechnical Investigation.

9. All State of California disability access regulations for accessibility shall be

complied with.

10. Foundation inspection will not be made until the excavation has been surveyed and the setbacks determined to be in accordance with the approved plans by a land surveyor licensed by the State of California. THIS NOTE IS TO BE PLACED ON THE FOUNDATION PLAN IN A PROMINENT LOCATION.

11. Buildings occupied for storage uses containing furniture and automobile parts shall be classified as Storage Group S-1 Occupancy.

12. Existing canopy and its eaves shall not hover or project over the roof of the new storage building per Table 705.2 of the Building Code when the new building is designed as a separate building from the two existing storage buildings. Canopy projections over the roof of the new building is only permitted where all three buildings (2 existing and 1 new) shall comply with Section 705.3, which are considered as one building.

13. Fire-resistance rating requirements for exterior walls based on fire separation distance of 0 to 10 feet shall comply with Table 705.5 of the Building Code should the new building is designed as a separate building from the two existing storage buildings.

14. Maximum area of exterior wall openings and degree of open protection based on fire separation distance of 0 to 10 feet shall comply with Table 705.8 of the Building Code should the new building is designed as a separate building from the two existing storage buildings.

15. Two exits are required in the new, larger warehouse space if the common path of egress travel distance per Table 1006.2.1 is exceeded.

16. Separate application and plan review is required for Electrical, Mechanical, and/or Plumbing plans.

17. Plumbing fixtures shall be provided for the new storage building as required by the Chapter 4 of the California Plumbing Code. Minimum quantity of plumbing fixtures analysis shall be provided to justify that there are sufficient existing plumbing fixtures including toilets and lavatories in the existing building to accommodate the minimum required quantities for the new storage building and the travel distance between the new building to the existing toilet facilities are not exceeded. Additional fixtures may otherwise be required if not in compliance.

18. Project shall comply with the CalGreen Non-Residential mandatory requirements as a new warehouse building. These requirements include but not limited to median-duty and heavy-duty EV charging readiness.

19. Project shall comply with the California Energy Code prescriptive requirements as a new warehouse building. These requirements include but not limited to PV and battery storage systems.

20. Demolition permit is required for any existing buildings which are to be demolished.

21. All fire sprinkler hangers must be designed, and their location approved by an engineer or an architect. Calculations must be provided indicating that the hangers are designed to carry the tributary weight of the water filled pipe plus a 250-pound point load. A plan indication this information must be stamped by the engineer or the architect and submitted for approval prior to issuance of the building permit.

22. Separate permit is required for Fire Sprinklers.

C. <u>Fire Department</u>

1. Provide fire access plan per 2022 Edition of the California Fire Code.
2. Provide fire flow test report to show current infrastructure meets 2022 California Fire Code, Appendix B/BB.
3. Provide location of closest fire hydrants.
4. Provide fire sprinkler system per 2022 Edition California Fire Code, NFPA 13 and Montebello Municipal Code section:15.32.190 - Automatic fire extinguishing systems. Any new building constructed for any occupancy use and not otherwise required to be protected by this code, shall be protected by an approved automatic fire extinguishing system when the total floor area of such building exceeds four thousand square feet. This provision shall apply to any existing building, which after completion of any addition, will exceed four thousand square feet of floor area.
5. Provider sprinkler monitoring per 2022 Edition California Fire Code and NFPA 72.
6. Knox Box in approved locations.
7. Knox Switches for all mechanized gates.

PUBLIC NOTIFICATION

Pursuant to MMC Section 17.78 (Public Hearings, Notices, and Appeals), the following noticing was performed:

- On January 4, 2024, the Public Hearing Notice was mailed to property owners within the 300-foot radius from the exterior boundaries of the Project Site.

- On January 4, 2024, the Public Hearing Notice was published in the Daily Journal (Whittier Daily News).

ATTACHMENT(S)

1. Site Plan, Floor Plan, and Elevations
2. Resolution No. 22-23
3. CEQA Notice of Exemption

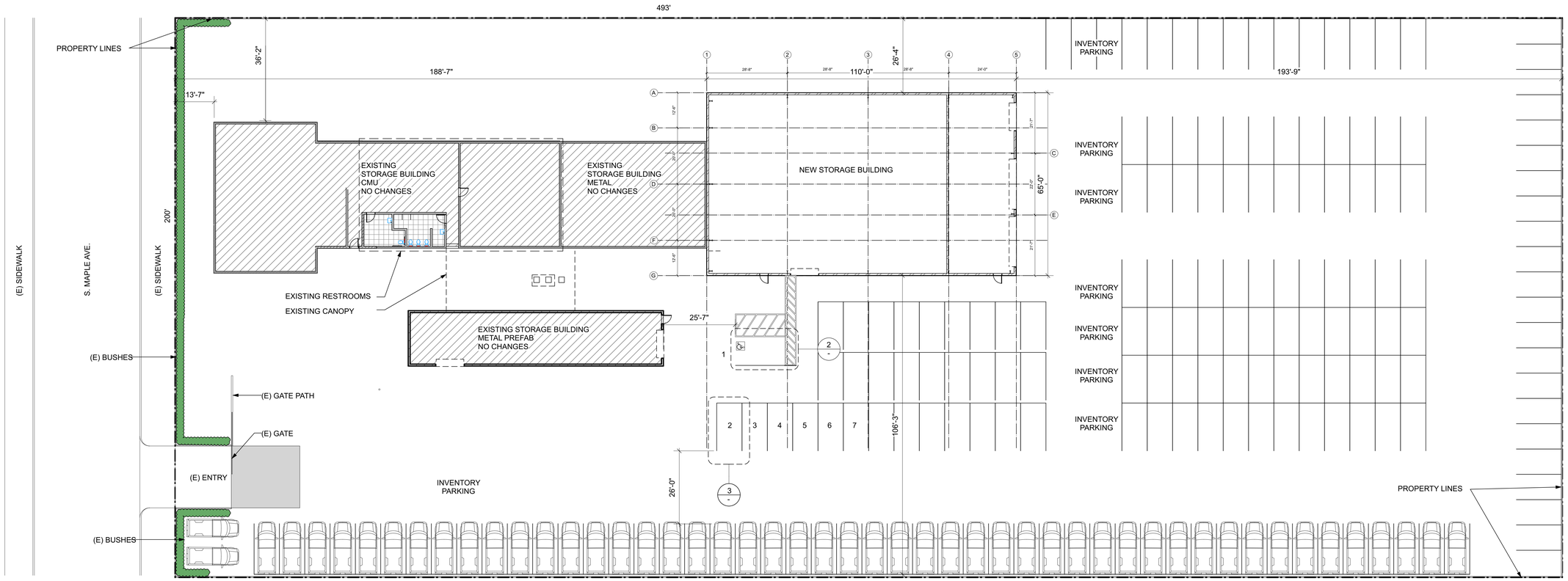

A SITE PLAN
Scale: 1/16" = 1'-0"

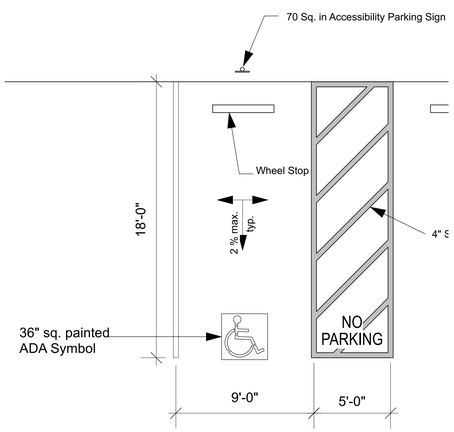

1 STANDARD ACCESSIBLE PARKING
Scale: 1/4" = 1'-0"

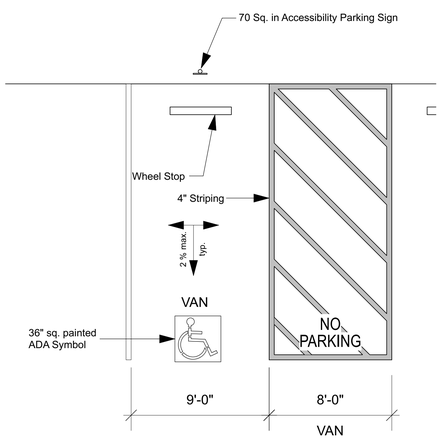

2 VAN PARKING SPACE
Scale: 1/4" = 1'-0"

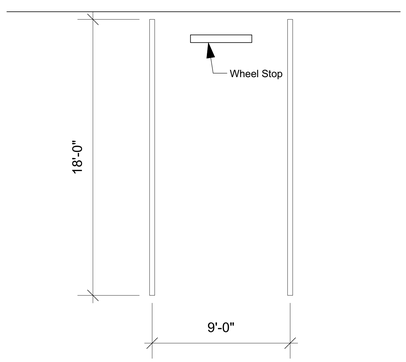

3 TYPICAL PARKING SPACE
Scale: 1/4" = 1'-0"

PROJECT

FORD OF MONTEBELLO

652 South Maple Avenue
Montebello, CA.

Roar ARCHITECTURE
www.roar.archi
350 W. ELM AVE.
BURBANK, CA 91506

VERSION

STAMP

MATTHEW ROESS
C-38494
REN. 05.31.23

DESCRIPTION

SYMBOL	DATE	DESCRIPTION
	05-01-23	PLAN CHECK

SITE PLAN

SHEET

A1.0

The drawings and specifications, ideas, designs and arrangements are and shall remain the property of the Architect: no part thereof shall be copied or used in connection with any work or project other than the specific project for which they have been prepared without the written consent of the designer.
Visual contact with these drawings or specifications shall constitute prima facie evidence of acceptance of these restrictions. Written dimensions on these drawings shall have precedence over scaled dimensions: contractor shall verify and be responsible for all dimensions and conditions on the job and this office must be notified of any variation from the dimensions and conditions shown on these drawings. Shop details must be submitted to this office for approval before proceeding with fabrication.

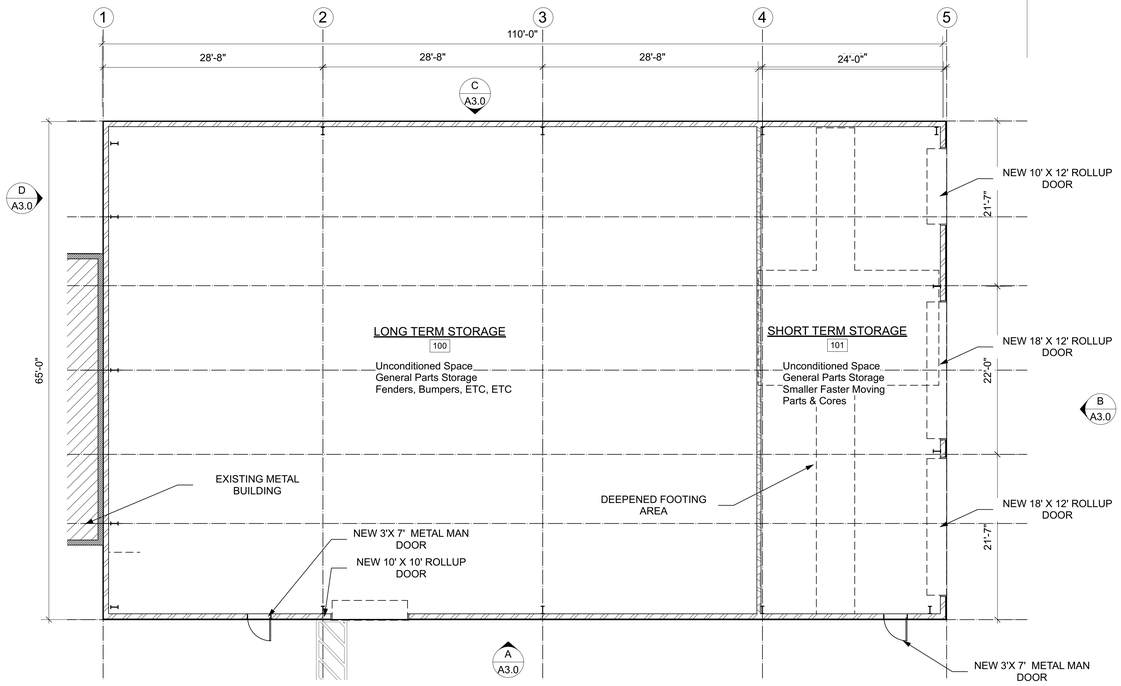

A FLOOR PLAN
Scale: 1/8" = 1'-0"

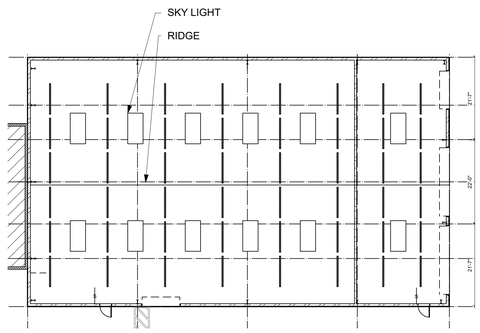

B REFLECTED CEILING PLAN
Scale: 1/16" = 1'-0"

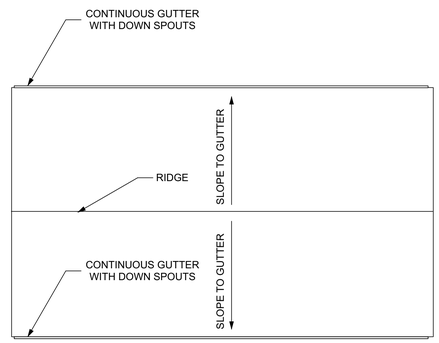

C ROOF PLAN
Scale: 1/16" = 1'-0"

PROJECT

FORD OF MONTEBELLO

652 South Maple Avenue
Montebello, CA.

Roar ARCHITECTURE
www.roar.archi
350 W. ELM AVE.
BURBANK, CA 91506

VERSION

STAMP

MATTHEW ROESS
C-38494
REN. 05.31.23

DESCRIPTION

SYMBOL	DATE	DESCRIPTION
	05-01-23	PLAN CHECK

FLOOR PLAN
RCP
ROOF PLAN

SHEET

A2.0

The drawings and specifications, ideas, designs and arrangements are and shall remain the property of the Architect: no part thereof shall be copied or used in connection with any other work, nor shall they be loaned to anyone for such purpose, have been prepared without the written consent of the designer. Visual contact with these drawings or specifications shall constitute evidence of acceptance of these restrictions. Written dimensions on these drawings shall have precedence over scaled dimensions. Contractor shall verify and be responsible for all dimensions and conditions on the job and this office must be notified of any variation from the dimensions and conditions shown by these drawings. Shop details must be submitted to this office for approval before proceeding with fabrication.

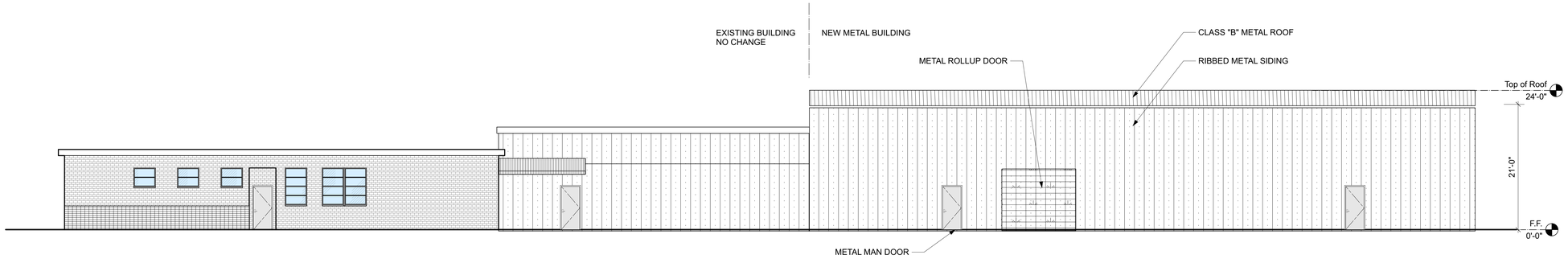

1 SOUTH ELEVATION
Scale: 1/8" = 1'-0"

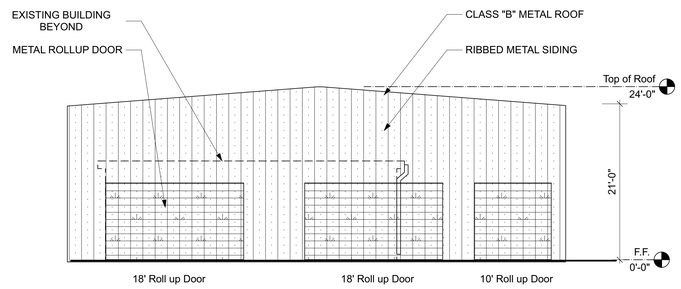

B EAST ELEVATION
Scale: 1/8" = 1'-0"

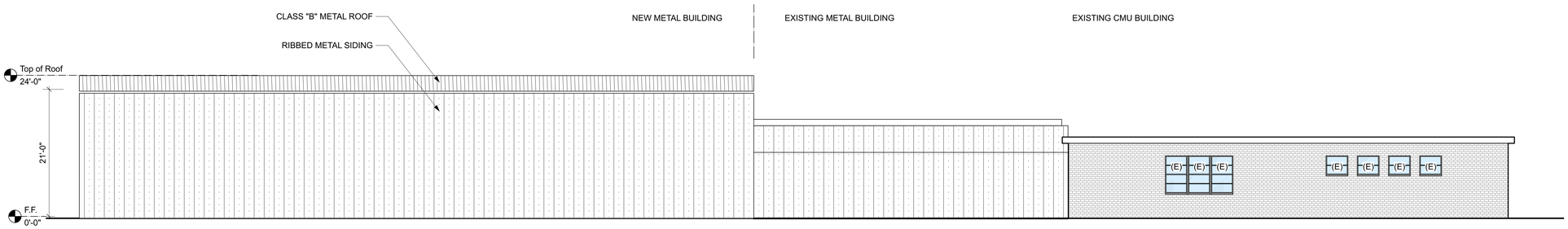

C NORTH ELEVATION
Scale: 1/8" = 1'-0"

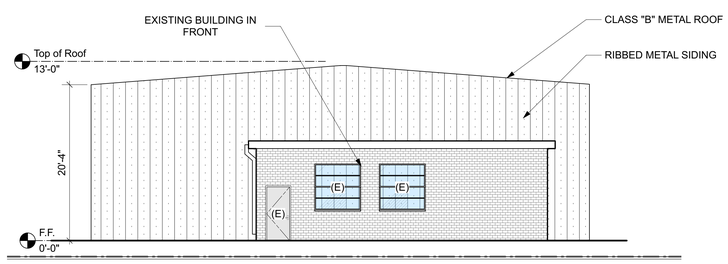

D WEST ELEVATION
Scale: 1/8" = 1'-0"

PROJECT

FORD OF MONTEBELLO

652 South Maple Avenue
Montebello, CA.

Roar ARCHITECTURE
www.roar.archi
350 W. ELM AVE.
BURBANK, CA 91506

VERSION

STAMP

MATTHEW ROESS
C-38494
REN. 05.31.23

DESCRIPTION

SYMBOL	DATE	DESCRIPTION
	05-01-23	PLAN CHECK

ELEVATIONS

SHEET

A3.0

The drawings and specifications, ideas, designs and arrangements are and shall remain the property of the Architect: no part thereof shall be copied or used in connection with any other work, or be loaned to anyone without the written consent of the Architect. Visual contact with these drawings or specifications shall have been prepared without the written consent of the designer. constitute evidence of acceptance of these restrictions. Written dimensions on these drawings shall have precedence over scaled measurements. Contractor shall verify and be responsible for all dimensions and conditions on the job and this office must be notified of any variation from the dimensions and conditions shown by these drawings. Shop details must be submitted to this office for approval before proceeding with fabrication.

CITY OF MONTEBELLO
PLANNING COMMISSION

RESOLUTION NO. 22-23

A RESOLUTION OF THE PLANNING COMMISSION OF THE CITY OF MONTEBELLO APPROVING SITE PLAN REVIEW (PC-2023-0017-SPR) WITH CONDITIONS TO PERMIT THE INSTALLATION OF A NEW 7,150 SQUARE FOOT PRE-MANUFACTURED METAL WAREHOUSE FOR THE GENERAL STORAGE OF FURNITURE AND AUTO PARTS TO BE USED BY FORD OF MONTEBELLO FOR THE PROPERTY LOCATED AT 652 SOUTH MAPLE AVENUE AND ADOPTING A NOTICE OF EXEMPTION UNDER CEQA 15332- CLASS 32 (IN-FILL DEVELOPMENT)

WHEREAS, a Site Plan Review (SPR) application has been received and accepted; and

WHEREAS, the Site Plan Review would allow the installation of a new 7,150 square foot pre-manufactured metal warehouse for general storage of furniture and auto related parts ("Project") for The Ford of Montebello ("Applicant") Robert Plant ("Contact Person") behalf of Draneb Properties LLC ("Property Owner") at the property located at 652 South Maple Avenue ("Project Site") pursuant to Montebello Municipal Code (MMC) Chapter 17.74- Site Plan Review; and

WHEREAS, pursuant to section 21067 of the Public Resources Code, and section 15367 of the California Environmental Quality Act (CEQA) Guidelines (Cal. Code Regs., tit. 14, § 15000 et seq.), the City of Montebello ("City") is the lead agency for the proposed Project; and

WHEREAS, the Site Plan Review for Case No. PC-2023-0017-SPR / ENV No. 15-23-CE is considered a "project", as per CEQA's definition of a "project"; and

WHEREAS, the Project is Categorically Exempt per CEQA §15332, Class 32 (In Fill Development) and meets the conditions set forth under Class 32 (In Fill Development Projects); and

WHEREAS, a duly noticed public hearing has been held, at which the Planning Commission received and considered staff presentations, recommendations, public testimony, and all other matters presented at the public hearing and included in the record for this matter, and all other legal prerequisites to the adoption of this Resolution have occurred; and

WHEREAS, all other legal prerequisites to the adoption of this Resolution have occurred.

NOW, THEREFORE, the Planning Commission of the City of Montebello hereby resolves that:

SECTION 1. RECITALS. The foregoing recitals are true and correct and are hereby incorporated as substantive findings in this Resolution.

SECTION 2. FINDINGS

A. GENERAL PLAN. The Planning Commission of the City of Montebello finds that the proposed Project is consistent with the General Plan.

Per the Montebello General Plan, the Project conforms to:

1. **General Plan Noise Element Objective #3 Industrial Zones** states that "Noise levels within industrial zones may be higher than that in residential or commercial zones".

2. **General Plan Land Use Element Goal #4** states "To provide for growth and development of an industrial area in a manner compatible with other uses".

3. **General Plan Circulation Element Goal #1** states that "To facilitate traffic movement and alleviate congestion in and around the city".

   The proposed project conforms to the City of Montebello General Plan Land Use Element as the proposed use will allow the growth of an industrial area. Montebello community benefits from the addition of the warehouse because currently the proposed parts are in the City of Alhambra. The client staff drives to Alhambra every time they need one of these parts. With this development the staff of Ford of Montebello will have all the slow-moving parts at one location which will reduce traffic across the city. With the current use of the industrial building, this property is not being utilized completely and the project site can be expanded to accommodate more warehouse space. The installation of this building supports the general plan noise goals as even though the industrial area allows more noise than residential and commercial, this warehouse is much quieter than a typical manufacturing use that is allowed through the noise element of the general plan.

B. SITE PLAN REVIEW. Pursuant to Section 17.74 of the MMC, before any variance shall be granted, all of the following findings must be made:

   1. Describe That the proposed design for improvement complies with all requirements of the Montebello Municipal Code;

The proposed design meets all setbacks, height requirements, common and private space requirements. The unit does not exceed the floor area ratio allowed and the parking requirements are exceeded. The building will be placed behind a green hedge 6 feet tall and an original brick warehouse from the 1950s. A Site Plan is required due to the commercial project resulting in the construction of five thousand or more feet of building area. The proposed project is 7,150 square feet. according to Section 17.74.030.

2. That the proposed design for improvement is consistent with the general plan; and

   The proposed project site is consistent with the general plan and reflects the goals that were set in place when designating certain zoning areas for manufacturing use. This area is zoned for light manufacturing and the addition of the warehouse will not change the land use of the property. Land Use Element Goal #4: To provide for growth and development of an industrial area in a manner compatible with other uses.

3. That the proposed design for improvement will not have any significant adverse impact on the surrounding properties or on the general public welfare.

   The proposed addition will not have any significant adverse impact on the surrounding properties as the surrounding area is currently developed with other industrial zoned properties. North, South, and West of the project site are all zoned for light manufacturing. East of the property is Single family residential. To minimize the effects on the single-family residents, the applicant will be planting trees to minimize the view that can be seen from the residential units to the East. This type of building has very little public traffic, creates very little noise, and does not burn. All material for the building is manufactured in a factory hundreds of miles from the project site. The time to install the building is approximately 3-4 weeks versus a tilt-up concrete building that would take 6-7 months to construct and would cause traffic, disruption, and noise. The addition of this project will be consistent with the surrounding land uses and will not have an adverse impact on surrounding properties.

SECTION 3. CEQA. The Planning Commission approves and adopts the CEQA Categorical Exemption § 15332 (In Fill Development) Class 32 exemption. A Class 32 exemption under CEQA § 15332 (In-Fill Development Projects), and none of the limitations set forth in CEQA Guidelines 15300.2 apply.

In order to qualify under an exemption pursuant to Class 32 of CEQA Guidelines Section 15332 (In Fill Development Projects), the following environmental findings must also be made:

a. *The project is consistent with the applicable general plan designation and all applicable general plan policies as well as with applicable zoning designation and regulations.*

   The proposed project conforms to the Montebello General Plan, Land Use Element in that the General Plan Land Use designation for the site is industrial, and the zoning designation is M-1 (Light Manufacturing).

b. *The proposed development occurs within the city limits on a project site of no more than five (5) acres substantially surrounded by urban uses.*

   The proposed development shall occur on a 98,658-square-foot (2.27 acres) lot located on South Maple Avenue and West Mines Ave within city limits and thus, is less than the maximum five acres specified in Section 15332(b) for this exemption. The site is surrounded by existing developed light manufacturing to the North, South, West, and single family residential to the East.

c. *The project has no value as habitat for endangered, rare or threatened species.*

   The proposed project has been previously developed with a warehouse. The subject property is surrounded by other manufacturing zones.

d. *Approval of the project would not result in any significant effects relating to traffic, noise, air quality, or water quality.*

   The proposed project shall not have any significant effects relating to traffic, noise, air quality, or water quality as the site is currently developed with a warehouse.

e. *The site can be adequately served by all required utilities and public services.*

   The project has been reviewed by City staff and it has been determined that it can be adequately served by all required utilities and public services.

SECTION 4. APPROVALS. The Planning Commission hereby approves Site Plan Review ("SPR") Case No. PC-2023-0017-SPR with conditions to permit the installation of a new 7,150 square feet pre-manufactured metal warehouse for general storage of furniture and auto related parts ("Project") for Ford of Montebello ("Applicant") on behalf of Draneb Properties LLC ("Property Owner") at the property located at 652 South Maple Avenue ("Project Site") pursuant to MMC Chapter 17.74 – Site Plan Review.

SECTION 5. CONDITIONS. The Planning Commission finds that the foregoing conditions of approval are necessary and appropriate:

A. Planning Division Conditions

1. The Applicant shall defend, indemnify, and hold harmless the city, its elected and appointed officials, agents, officers, and employees from any claim, action, or proceeding brought against the city, its elected and appointed officials, agents, officers, or employees arising out of, or which are related to the Applicant's project or application (collectively referred to as "proceedings"). The indemnification shall include, but not be limited to, damages, fees and/or costs awarded against the City, if any, and cost of suit, attorney's fees, and other costs, liabilities, and expenses incurred or awarded in connection with the proceedings whether incurred by the Applicant, the city and/or the parties initiating or bringing such proceedings. This indemnity provision shall include the Applicant's obligation to indemnify the city for all the city's costs, fees, and damages that the city incurs in enforcing the indemnification provisions set forth herein. The City shall have the right to choose its own legal counsel to represent the City's interest in the proceedings.

2. The development and utilization of the subject site shall conform to the allowed use, except as provided for herein and by subsequent revisions found by the Director of Planning and Community Development ("Director") to be in substantial compliance with these provisions.

3. The development and utilization of the subject site shall be consistent with all of the provisions of the MMC and SPR (Case No. PC-2023-0017-SPR) and the specifications of the Planning Division.

4. Within thirty (30) days of the City Planning Division transmittal of the Acceptance Form, the Applicant shall sign and return a copy of the Acceptance Form, agreeing to the conditions of approval and acknowledging that failure to comply with such conditions shall constitute grounds for potential revocation of the permit approval. Failure to return the Acceptance Form within thirty (30) days shall constitute grounds for terminating the permit.

5. In the event the Applicant violates or fails to comply with any conditions of approval of this permit, no further permits, licenses, approvals, or certificate of occupancy shall be issued until such violation(s) have been fully remedied.

6. No signs shall be installed on the site until a sign permit has been approved by the Planning Department and Building & Safety Division in conformance with the provisions set forth in Chapter 17.62.080 ("Signs- Residential zones") of the MMC and the provisions set forth in the SPR.

7. The approval of the entitlement shall expire if the rights granted are not exercised within one (1) year from the SPR's effective date. Exercise of right shall mean issuance of a building permit to commence construction or similar activities demonstrating the intent to proceed with the project, as determined by the director.

8. The Director, at any time, can call for a review of the approved conditions of approval at a duly noticed public hearing before the Planning Commission. These condition(s) may be modified, or new condition(s) added to reduce any impacts of the use (Case No. PC-2023-0017-SPR).

9. The Applicant or successor in interest shall meet the applicable code requirements and all other City Department regulations.

10. All applicable conditions of approval from previous entitlements on the property shall remain in full force and effect, unless otherwise specifically noted in this Resolution.

11. The property owner will bear the full costs of all monitoring and inspection activities to be conducted by City staff, or its designated representative(s), as necessary to ensure compliance with the conditions of this Resolution.

12. Any change, expansion, intensification and/or modification to the proposed plans use, or mode of operations shall be subject to the review and approval by the Director who may take action or call for review by the Planning Commission at a noticed public hearing.

13. This approval shall not supersede the approval of any other responsible agencies. The Applicant shall comply with all Federal, State and local laws.

14. The approval of this SPR (Case No. PC-2023-0017-SPR) can be extended up to and not to exceed an additional two (2) years with a written request by the property owner thirty (30) days prior to the expiration date stating the reason and need for an extension and upon review and approval by the

Director.

15. In the event of a violation of the conditions of approval, no further permits, licenses, approvals or certificates of occupancy shall be issued until such violation has been fully remedied.

16. The development and utilization of the site shall comply with all the provisions of all of the current Building, Plumbing, Mechanical, Electrical Codes, and City Ordinances, as well as additional requirements from the Montebello Building and Safety Division.

17. The development and utilization of the site shall be subject to the review and approval of the Public Works Department. Additional Montebello Public Works Department requirements may be required prior to issuing building permits.

18. The development and utilization of the site shall comply with all the provisions of all of the California Fire Code, International Fire Code, and National Fire Protection Association standards as well as additional requirements from the Montebello Fire Department.

19. **Modification to Plans.** Subsequent modification to this approval, which do not intensify the use, including but not limited to reorientation of structures, alteration of parking and circulation design, minor changes to the Conditions of Approval, interpretations of the Conditions of Approval relative to intent, necessity of, and timing, may be approved by the Director within a 25% deviation, unless the Director requires a Substantial Conformance or revised Permit application in accordance with the City Development Code.

20. The Applicant shall contact the Planning Division to arrange a Planning Inspection of the site prior to the release of occupancy/utilities. This inspection is to confirm that the conditions of approval and code requirements have been satisfied.

21. The Applicant shall submit detailed landscape and irrigation plans prepared by a licensed Landscape Architect, which meet the requirements set forth in MMC shall be required as a part of the project Plan Check review and approval process. Plans shall be forwarded to the Planning Division for final approval prior to issuance of building permits.

22. A copy of the approved Resolution shall be attached to the construction plans for any site improvement at the submittal of plans for plan check.

23. It is the responsibility of the property owner to have all graffiti on the site removed within twenty-four (24) hours of its appearance, or be subject to citation from the City Code Enforcement Division.

24. All improvements to the subject property shall be in compliance with all City Ordinances.

25. The hours of construction shall be 7:00 a.m. to 8:00 p.m., Monday through Friday, and weekends and holidays 9:00 a.m. to 6:00 p.m. as restricted by the MMC Section 9.08.050.

26. The street shall be swept at the end of the day if visible soil material is carried onto adjacent public paved roads.

27. The guest parking spaces shall be posted and striped with double lines spaced six (6) inches apart and shall comply with the City's off-street parking requirements as per MMC Section 17.52.070. Such striping shall be shown on the plans submitted for plan check.

28. Any parking space that fronts a building wall or fence with no separation between the front end of the parking space and the wall or fence, shall be provided with a concrete wheel stop or curb barrier not less than two (2) feet from such wall or fence property line. Such wheel stop or curb barrier shall be securely installed and maintained.

29. An application for a Lot Tie to hold the two contiguous parcels as one site and shall be approved prior to the issuance of building permits.

30. The specifications of the Montebello Public Works Department and the Engineering Division shall be complied with:

    The Applicant will continue to work with the Public Works Department and Engineering Division to finalize the certification of the Lot Tie and will, upon request, provide the Public Works Department with any additional information or documentation required.

31. The landscape plan shall conform to the MMC requirements. Shrubs shall not be less than three (3) feet in height when planted and cover not less than thirty (30) percent of the landscaped area. All landscaping shall cover the designated planting areas from the outset.

32. All trees shall be at least twenty-four inch (24") box or equivalent.

33. All landscape planters shall be surrounded by a six (6) inch concrete curb.

34. A trash enclosure shall be constructed of decorative masonry block or masonry block with decorative finish, such as stucco, and view-obscuring doors that are compatible with the main residence, subject to the final review and approval of the Planning Department. The applicant shall reflect this

requirement on the plans submitted for plan check.

35. All existing and proposed utilities (Gas, Electricity, Communications, etc.) shall be placed underground. The applicant shall reflect this requirement on plans submitted for “Plan Check”.

36. All outdoor utilities or machinery located outside the exterior walls, including roof-mounted equipment, shall be completely screened from view from any public right-of-way or adjacent residential use by either view obscuring landscaping or architectural features of the main building (i.e. parapet walls, façade extension, etc.), subject to the final review and approval of the Planning Department.

37. Any inevitable exposed wires shall be neatly bolted and painted to match the building color.

38. The exterior of all structures and walls shall be a neutral color scheme and shall be consistent with the provisions of the Color Ordinance of the City of Montebello, subject to the review and approval of the Planning Department.

39. Any substantial change or modification to the proposed site plan shall be subject to review and approval by the Planning Commission.

B. <u>Building Department Comments</u>

1. The second sheet of building plans is to list all conditions of approval and to include a copy of the Planning Commission Decision letter. This information shall be incorporated into the plans prior to the first submittal for plan check.

2. Plans prepared in compliance with the current Building Code shall be submitted to Building Division for review prior to permit issuance.

3. Fees shall be paid to the County of Los Angeles Sanitation District prior to issuance of the building permit.

4. An application to assign unit numbers shall be filed with the City prior to plan check submittal.

5. In accordance with paragraph 5538(b) of the California Business and Professions Code, plans are to be prepared and stamped by a licensed architect.

6. Structural calculations prepared under the direction of an architect, civil engineer or structural engineer shall be provided.

7. A geotechnical and soils investigation report is required, the duties of the soils engineer of record, as indicated on the first sheet of the approved plans, shall include the following:

a) Observation of cleared areas and benches prepared to receive fill.
b) Observation of the removal of all unsuitable soils and other materials.
c) The approval of soils to be used as fill material;
d) Inspection of compaction and placement of fill;
e) The testing of compacted fills; and
f) The inspection of review of drainage devices.

8. The owner shall retain the soils engineer preparing the Preliminary Soils and/or Geotechnical Investigation accepted by the City for observation of all grading, site preparation, and compaction testing. Observation and testing shall not be performed by other soils and/or geotechnical engineer unless the subsequent soils and/or geotechnical engineer submits and has accepted by the City, a new Preliminary Soils and/or Geotechnical Investigation.

9. All State of California disability access regulations for accessibility shall be complied with.

10. Foundation inspection will not be made until the excavation has been surveyed and the setbacks determined to be in accordance with the approved plans by a land surveyor licensed by the State of California. THIS NOTE IS TO BE PLACED ON THE FOUNDATION PLAN IN A PROMINENT LOCATION.

11. Buildings occupied for storage uses containing furniture and automobile parts shall be classified as Storage Group S-1 Occupancy.

12. Existing canopy and its eaves shall not hover or project over the roof of the new storage building per Table 705.2 of the Building Code when the new building is designed as a separate building from the two existing storage buildings. Canopy projections over the roof of the new building is only permitted where all three buildings (2 existing and 1 new) shall comply with Section 705.3, which are considered as one building.
13. Fire-resistance rating requirements for exterior walls based on fire separation distance of 0 to 10 feet shall comply with Table 705.5 of the Building Code should the new building is designed as a separate building from the two existing storage buildings.

14. Maximum area of exterior wall openings and degree of open protection based on fire separation distance of 0 to 10 feet shall comply with Table 705.8 of the Building Code should the new building is designed as a separate building from the two existing storage buildings.

15. Two exits are required in the new, larger warehouse space if the common path of egress travel distance per Table 1006.2.1 is exceeded.

16. Separate application and plan review is required for Electrical, Mechanical, and/or Plumbing plans.

17. Plumbing fixtures shall be provided for the new storage building as required by the Chapter 4 of the California Plumbing Code. Minimum quantity of plumbing fixtures analysis shall be provided to justify that there are sufficient existing plumbing fixtures including toilets and lavatories in the existing building to accommodate the minimum required quantities for the new storage building and the travel distance between the new building to the existing toilet facilities are not exceeded. Additional fixtures may otherwise be required if not in compliance.

18. Project shall comply with the CalGreen Non-Residential mandatory requirements as a new warehouse building. These requirements include but not limited to median-duty and heavy-duty EV charging readiness.

19. Project shall comply with the California Energy Code prescriptive requirements as a new warehouse building. These requirements include but not limited to PV and battery storage systems.

20. Demolition permit is required for any existing buildings which are to be demolished.

21. All fire sprinkler hangers must be designed, and their location approved by an engineer or an architect. Calculations must be provided indicating that the hangers are designed to carry the tributary weight of the water filled pipe plus a 250-pound point load. A plan indication this information must be stamped by the engineer or the architect and submitted for approval prior to issuance of the building permit.

22. A separate permit is required for Fire Sprinklers.

C. <u>Fire Department Comments</u>

1. Provide fire access plan per 2022 Edition of the California Fire Code.
2. Provide fire flow test report to show current infrastructure meets 2022 California Fire Code, Appendix B/BB.
3. Provide location of closest fire hydrants.
4. Provide fire sprinkler system per 2022 Edition California Fire Code, NFPA 13 and Montebello Municipal Code section:15.32.190 - Automatic fire extinguishing systems.

Any new building constructed for any occupancy use and not otherwise required to be protected by this code, shall be protected by an approved automatic fire extinguishing system when the total floor area of such building exceeds four thousand square feet. This provision shall apply to any existing building, which after completion of any addition, will exceed four thousand square feet of floor area.

5. Provider sprinkler monitoring per 2022 Edition California Fire Code and NFPA 72.
6. Knox Box in approved locations.
7. Knox Switches for all mechanized gates

PASSED AND ADOPTED this 16th day of January 2024 by the Planning Commission.

Commissioner Cuevas: ( ) AYE ( ) NOE ( ) ABSENT ( ) ABSTAIN
Commissioner Morales: ( ) AYE ( ) NOE ( ) ABSENT ( ) ABSTAIN
Commissioner Valdez: ( ) AYE ( ) NOE ( ) ABSENT ( ) ABSTAIN
Commissioner Lomeli: ( ) AYE ( ) NOE ( ) ABSENT ( ) ABSTAIN
Commissioner Medina: ( ) AYE ( ) NOE ( ) ABSENT ( ) ABSTAIN

_____
Victor Cuevas, Chair

ATTEST:

_____
Joseph A. Palombi, Director
Planning & Community Development Department

Notice of CEQA Exemption

To:
County of Los Angeles
Registrar-Recorder/County Clerk
12400 Imperial Highway
Norwalk, CA 90650

From:
City of Montebello
Planning & Community Development Department
1600 W. Beverly Blvd.
Montebello, CA 90640

Lead Agency: City of Montebello Planning and Community Development Department
Project Title: Site Plan Review to allow the installation of a new 7,150 square feet pre-manufactured metal warehouse for general storage of furniture and auto parts for Ford of Montebello on their remote inventory lot.

Project Location: 652 South Maple Avenue, Montebello, CA 90640
Case Number(s): PC-2023-0017-SPR & ENV No. 15-23-CE

Description of Nature, Purpose, and Beneficiaries of Project: Site plan review ("SPR") Case No. PC-2023-0017-SPR to allow the installation of a new 7,150 square feet pre-manufactured metal warehouse (the "Project") for the Ford of Montebello ("Applicant") for the property located at 652 South Maple Avenue, Montebello, CA 90640 ("Project Site").

Name of the Public Agency Approving the Project: City of Montebello
Name of Person or Agency Carrying Out the Project: Robert Plant on behalf of Draneb Properties LLC, ("Property Owner")

Exempt Status (*check one*)
☐ Ministerial (Sec. 21080(b)(1); 15268(b)(3))
☐ Declared Emergency (Sec. 21080(b)(3); 15269(a));
☐ Emergency Project (Sec. 21080(b)(4); 15269(b)(c));
☒ Categorical Exemption. State type and section number: Class 32- CEQA Guidelines Section 15332 (In-Fill Development)
☐ Statutory Exemptions. State code number:

Justification for Project Exemption:

The Project is Categorically Exempt per §15332 - Class 32 (In-Fill Development), as none of the limitations set forth in CEQA Guidelines 15300.2 apply. To qualify under an exemption pursuant to Class 32 of Section § 15332 (In Fill Development Projects), the following environmental findings must also be made. The project is consistent with the General Plan as well as applicable zoning designation and regulations being in the M-1 Zone with various permitted uses, the Project occurs within City limits and is on a project site of no more than five (5) acres, and the Project Site has no value as habitat for endangered, rare, or threatened species because it is on an existing developed site. Approval of the project would not result in any significant effects relating to traffic, noise, air quality, or water quality and the site can be adequately served by all required utilities and public services.

Lead Agency Contact Person: Joseph A. Palombi, Director of Planning & Community Development
Area Code/Telephone/Extension: (323) 887-1200

If filed by applicant, attach certified document issued by the Planning and Community Development Department stating that the Department has found the project to be exempt.

Signature: _____ **Date:** _____ **Title:** _____

☒ Signed by Lead Agency ☐ Signed by Applicant